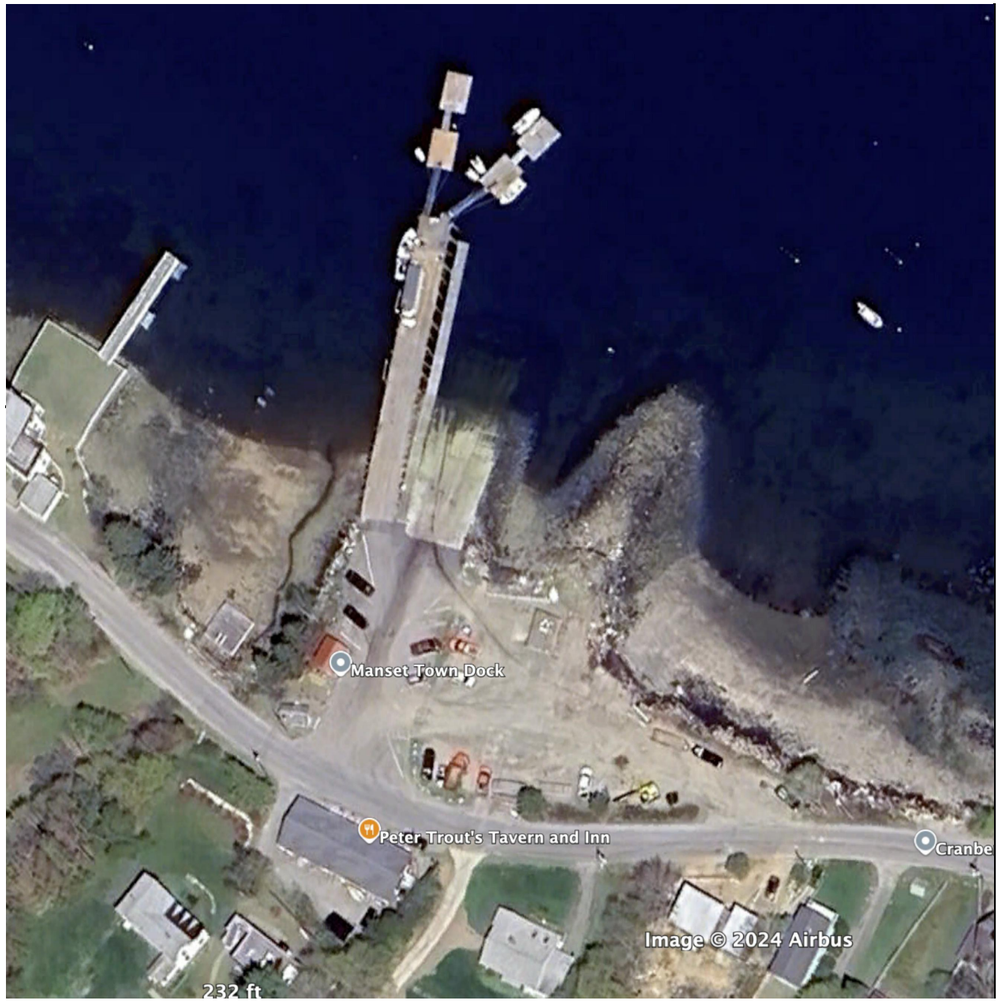

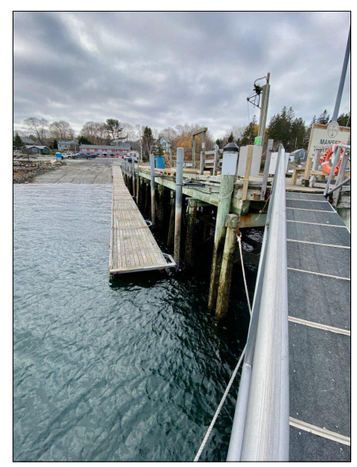

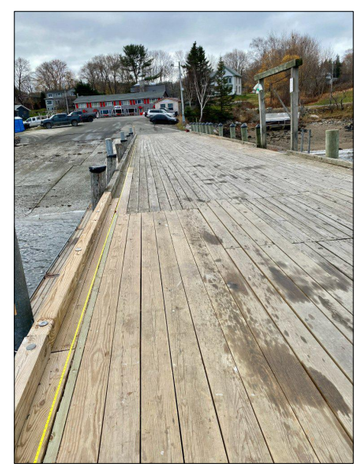

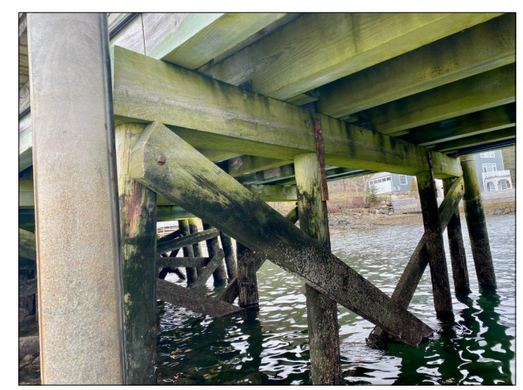

APPENDIX A - PLANS
TABLE OF CONTENTS

SHEET	TITLE
0	COVER SHEET
1	EXISTING PIER GENERAL PLANS AND ELEVATION
2	EXISTING PIER TYPICAL SECTION
Option A -CAST-IN-PLACE CONCRETE	
A-1	DECK REPLACEMENT PLAN
A-2	DECK REPLACEMENT SECTION
A-3	DECK REPLACEMENT SLAB DETAILS
A-4	DECK REPLACEMENT SLAB DETAILS
A-5	DECK REPLACEMENT ABUTMENT
A-6	DECK REPLACEMENT OUTBOARD PLAN
A-7	DECK REPLACEMENT GANGWAY DETAILS
A-8	DECK REPLACEMENT FENDER DETAILS
A-9	GENERAL NOTES
Option B -PRECAST CONCRETE	
B-1	DECK REPLACEMENT PLAN
B-2	DECK REPLACEMENT SECTIONS
B-3	DECK REPLACEMENT PANEL DETAILS
B-4	DECK REPLACEMENT PANEL DETAILS
B-5	DECK REPLACEMENT ABUTMENT
B-6	DECK REPLACEMENT OUTBOARD PLAN
B-7	DECK REPLACEMENT GANGWAY DETAILS
B-8	DECK REPLACEMENT FENDER DETAILS
B-9	GENERAL NOTES

To print at full size, use 11x17 paper

STATE OF MAINE
STEPHEN T. RUELL
No. 4396
LICENSED PROFESSIONAL ENGINEER

PINNACLE HILL ENGINEERING
33 Pinnacle Road
Canaan, ME 04924
PinnacleHillEngineering@gmail.com

ISSUED FOR BID

DATE REVISED
4-4-2025

Town of Southwest Harbor
26 Village Green Way. PO Box 745
SW Harbor, ME 04679

Manset Town Dock Repairs

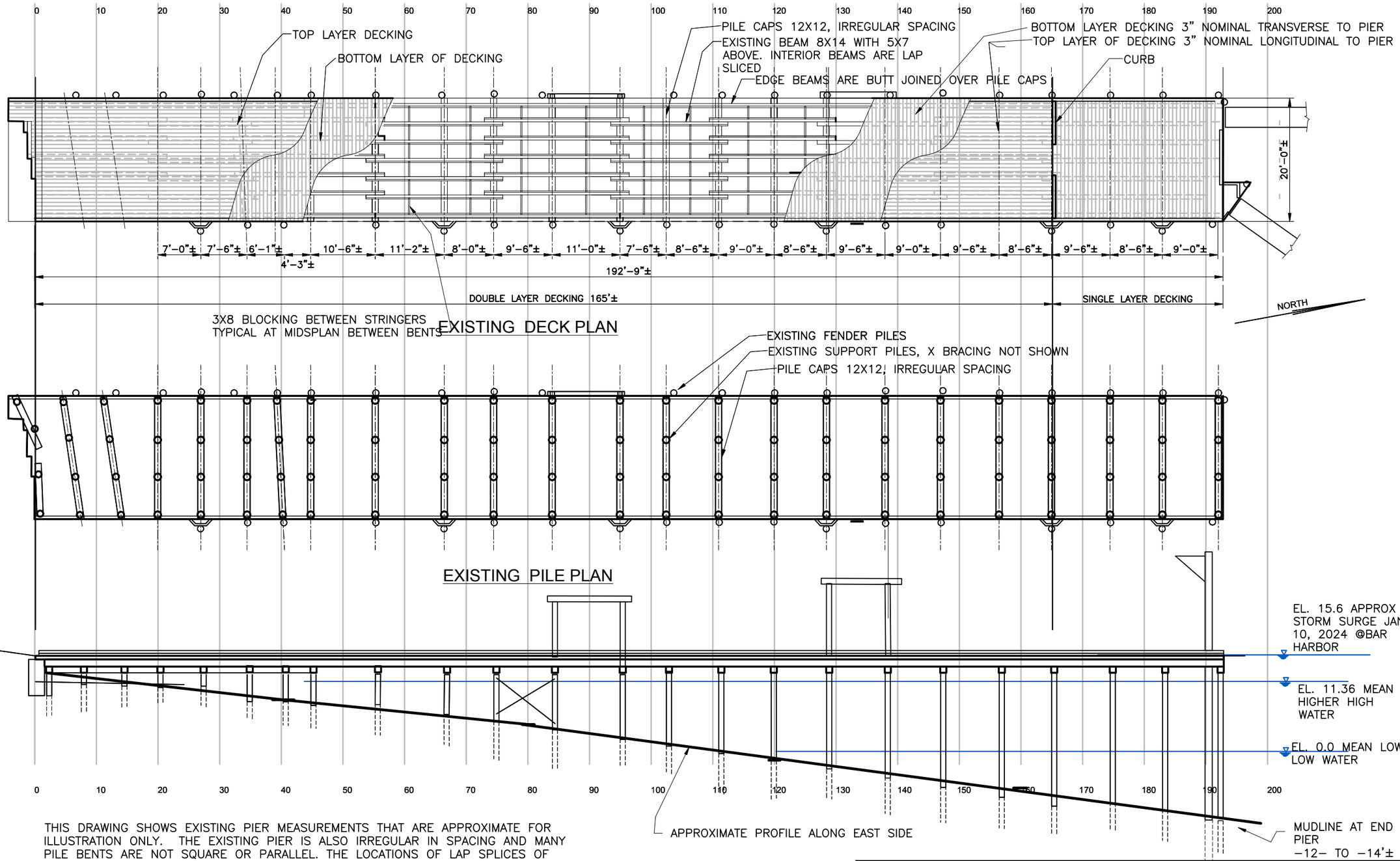

THIS DRAWING SHOWS EXISTING PIER MEASUREMENTS THAT ARE APPROXIMATE FOR ILLUSTRATION ONLY. THE EXISTING PIER IS ALSO IRREGULAR IN SPACING AND MANY PILE BENTS ARE NOT SQUARE OR PARALLEL. THE LOCATIONS OF LAP SPLICES OF EXISTING FLOOR STRINGERS WERE NOT MEASURED, AND IF NECESSARY SHOULD BE CONFIRMED BY CONTRACTOR.

EXISTING EAST ELEVATION

STATE OF MAINE
STEPHEN T. RUELL
No. 4396
LICENSED PROFESSIONAL ENGINEER

NO.	REVISION	DATE

DESIGNED BY
DRAWN BY - STR
-
DATE REVISED 4-4-2025

Town of Southest Harbor, Maine
MANSET TOWN DOCK

EXISTING PIER
GENERAL PLANS AND ELEVATION

PINNACLE HILL ENGINEERING
33 Pinnacle Road
Canaan, ME 04924
PinnacleHillEngineering@gmail.com

1
REV. O

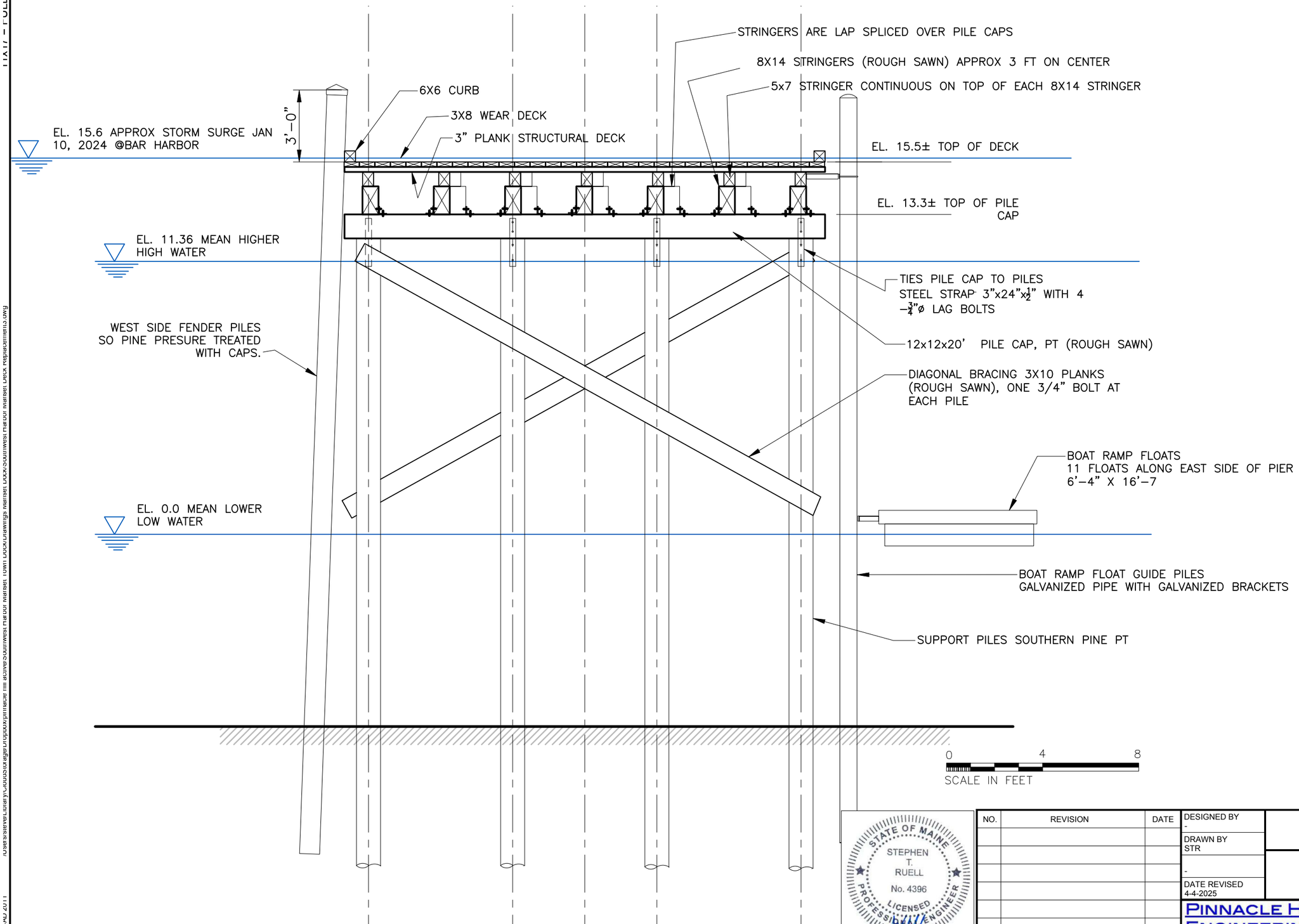

STATE OF MAINE
STEPHEN T. RUELL
No. 4396
LICENSED PROFESSIONAL ENGINEER

NO.	REVISION	DATE

DESIGNED BY -
DRAWN BY STR
-
DATE REVISED 4-4-2025

Town of Southest Harbor, Maine
MANSET TOWN DOCK

EXISTING PIER
TYPICAL SECTION

PINNACLE HILL ENGINEERING
33 Pinnacle Road
Canaan, ME 04924
PinnacleHillEngineering@gmail.com

2
REV. O

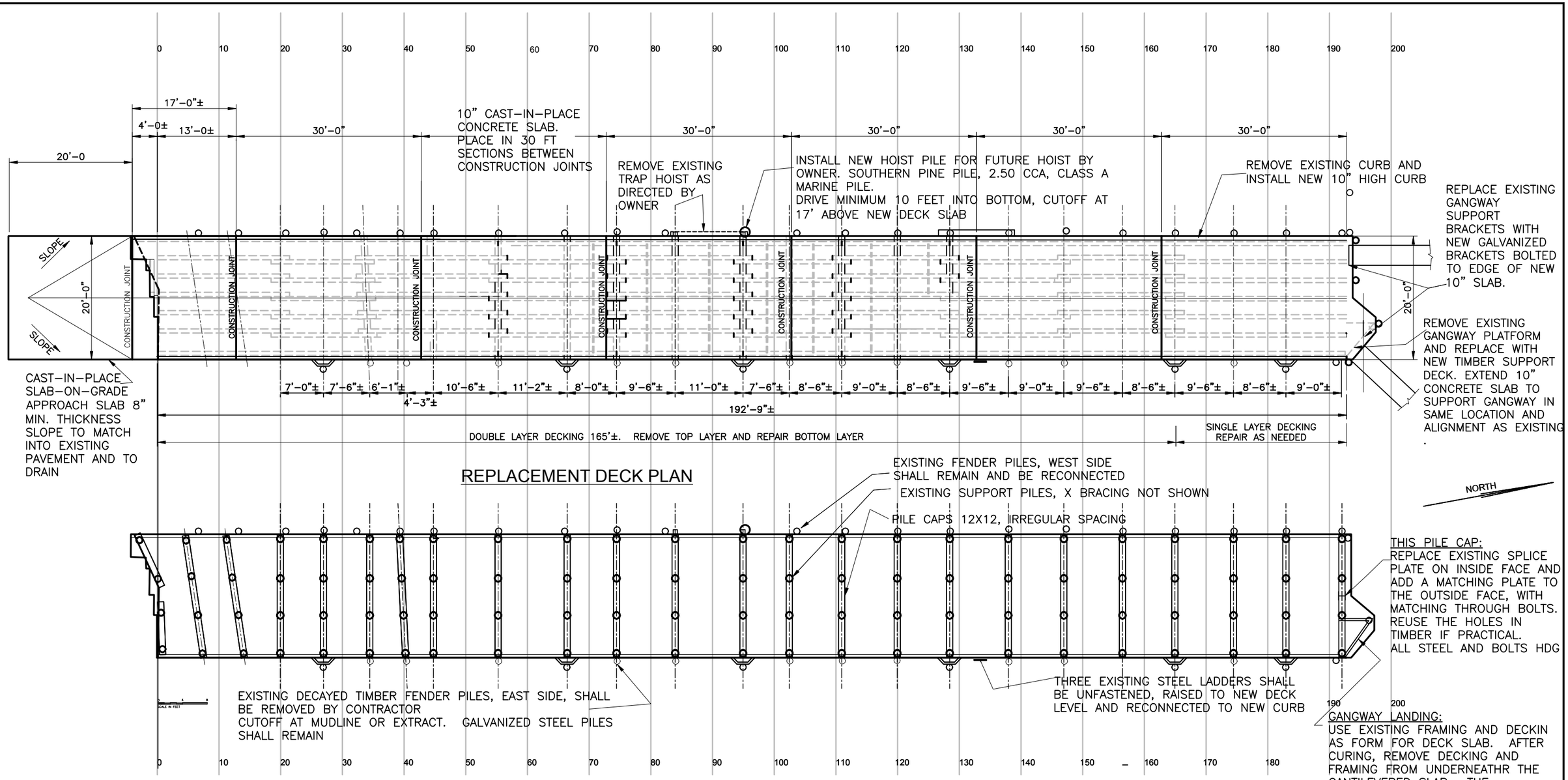

REPLACEMENT DECK PLAN

FOUNDATION PLAN

THIS DRAWING SHOWS EXISTING PIER MEASUREMENTS THAT ARE APPROXIMATE FOR ILLUSTRATION ONLY. THE EXISTING PIER IS ALSO IRREGULAR IN SPACING AND MANY PILE BENTS ARE NOT SQUARE OR PARALLEL. THE NEW DECK SHALL BE CONSTRUCTED WITH SQUARE AND PARALLEL EDGES, USING THE BOAT RAMP STEEL PILES AS THE BASELINE

WHERE REQUIRED CONTRACTOR SHALL VERIFY ALL DIMENSIONS AND LOCATIONS OF STRUCTURAL MEMBERS AND PILES, BEFORE PURCHASE OF MATERIALS.

THE LOCATIONS OF LAP SPLICES OF EXISTING FLOOR STRINGERS WERE NOT MEASURED, AND IF NECESSARY SHOULD BE CONFIRMED BY CONTRACTOR.

STATE OF MAINE
STEPHEN T. RUELL
No. 4396
LICENSED PROFESSIONAL ENGINEER

NO.	REVISION	DATE

DESIGNED BY -
DRAWN BY STR
-
DATE REVISED 4-4-2025

Town of Southest Harbor, Maine
MANSET TOWN DOCK

DECK REPLACEMENT PLAN
OPTION A - CAST-IN-PLACE CONCRETE

PINNACLE HILL ENGINEERING
33 Pinnacle Road
Canaan, ME 04924
PinnacleHillEngineering@gmail.com

A-1
REV. O

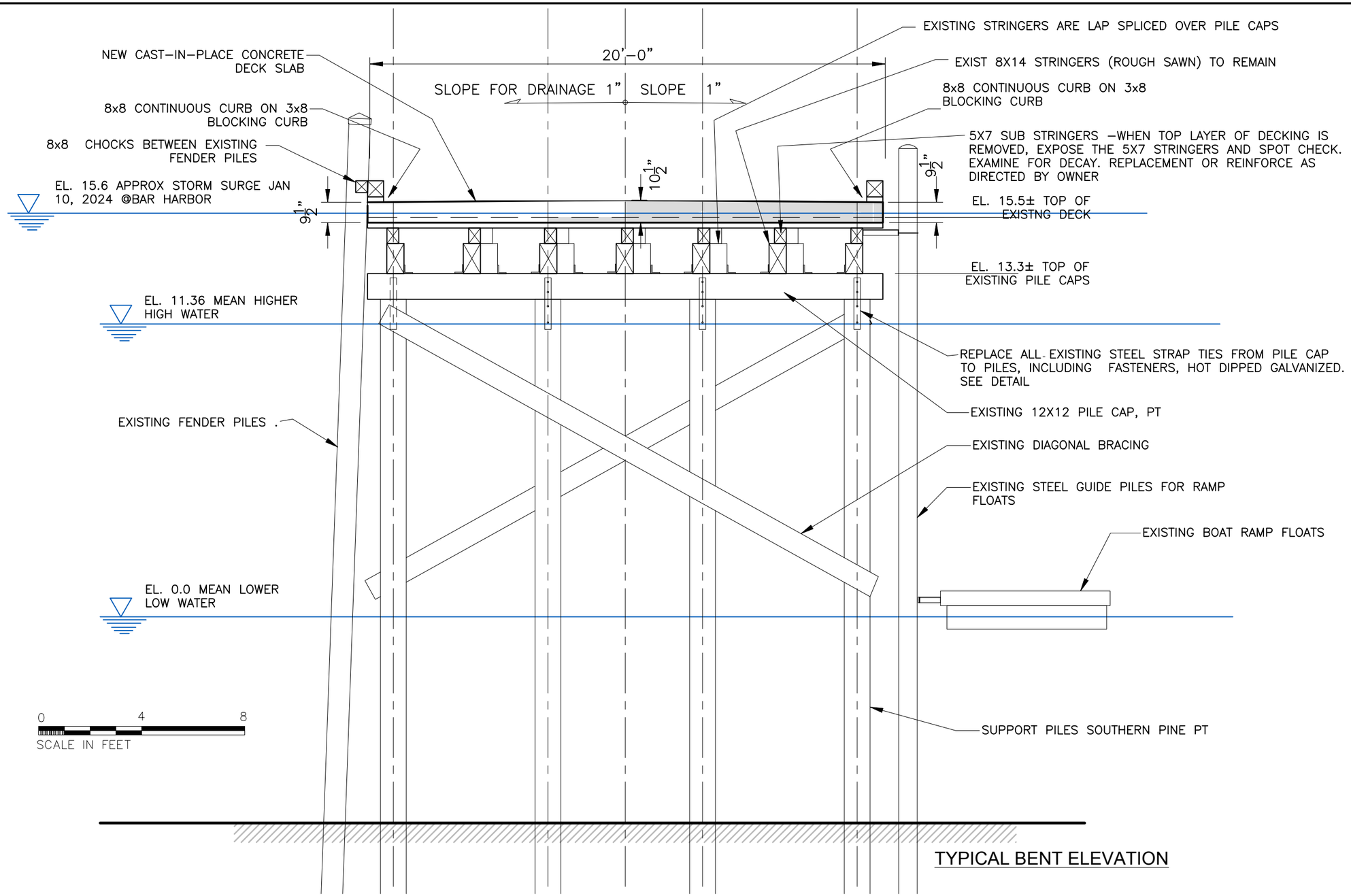

TYPICAL BENT ELEVATION

STATE OF MAINE
STEPHEN T. RUELL
No. 4396
LICENSED PROFESSIONAL ENGINEER

NO.	REVISION	DATE

DESIGNED BY -
DRAWN BY STR
-
DATE REVISED 4-4-2025

Town of Southest Harbor, Maine
MANSET TOWN DOCK

DECK REPLACEMENT SECTION
OPTION A - CAST-IN-PLACE CONCRETE

PINNACLE HILL ENGINEERING
33 Pinnacle Road
Canaan, ME 04924
PinnacleHillEngineering@gmail.com

A-2
REV. O

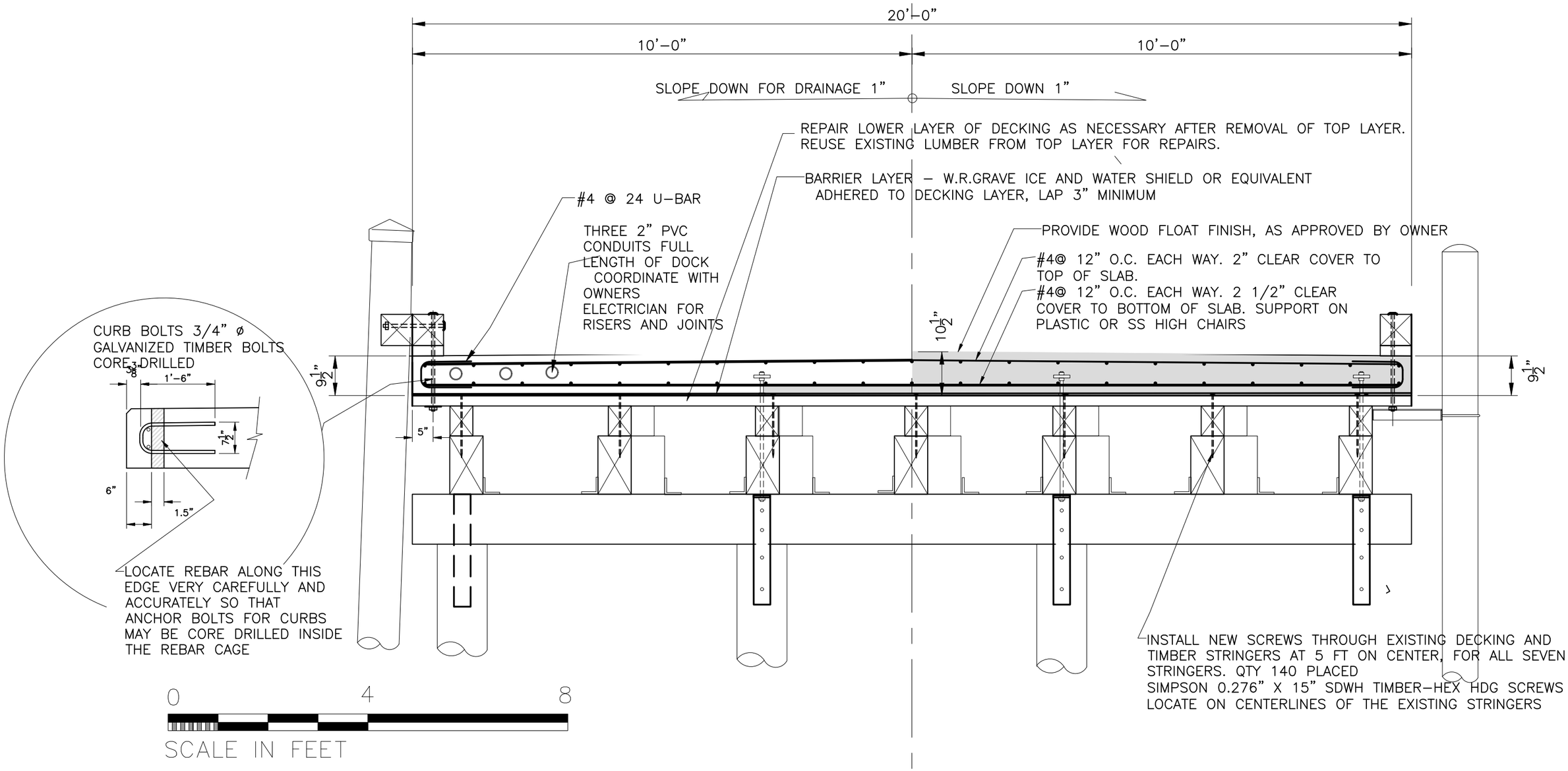

TYPICAL DECK SLAB TRANSVERSE SECTION

STATE OF MAINE
STEPHEN T. RUELL
No. 4396
LICENSED
PROFESSIONAL ENGINEER

NO.	REVISION	DATE

DESIGNED BY -
DRAWN BY STR
-
DATE REVISED 4-4-2025

Town of Southest Harbor, Maine
MANSET TOWN DOCK

DECK REPLACEMENT SLAB DETAILS
OPTION A - CAST-IN-PLACE CONCRETE

PINNACLE HILL ENGINEERING
33 Pinnacle Road
Canaan, ME 04924
PinnacleHillEngineering@gmail.com

A-3
REV. O

11X17 - FULL SCALE
J:\Projects\Manset Dock Replacement\Manset Dock Replacement.dwg
AV 1/17/2017

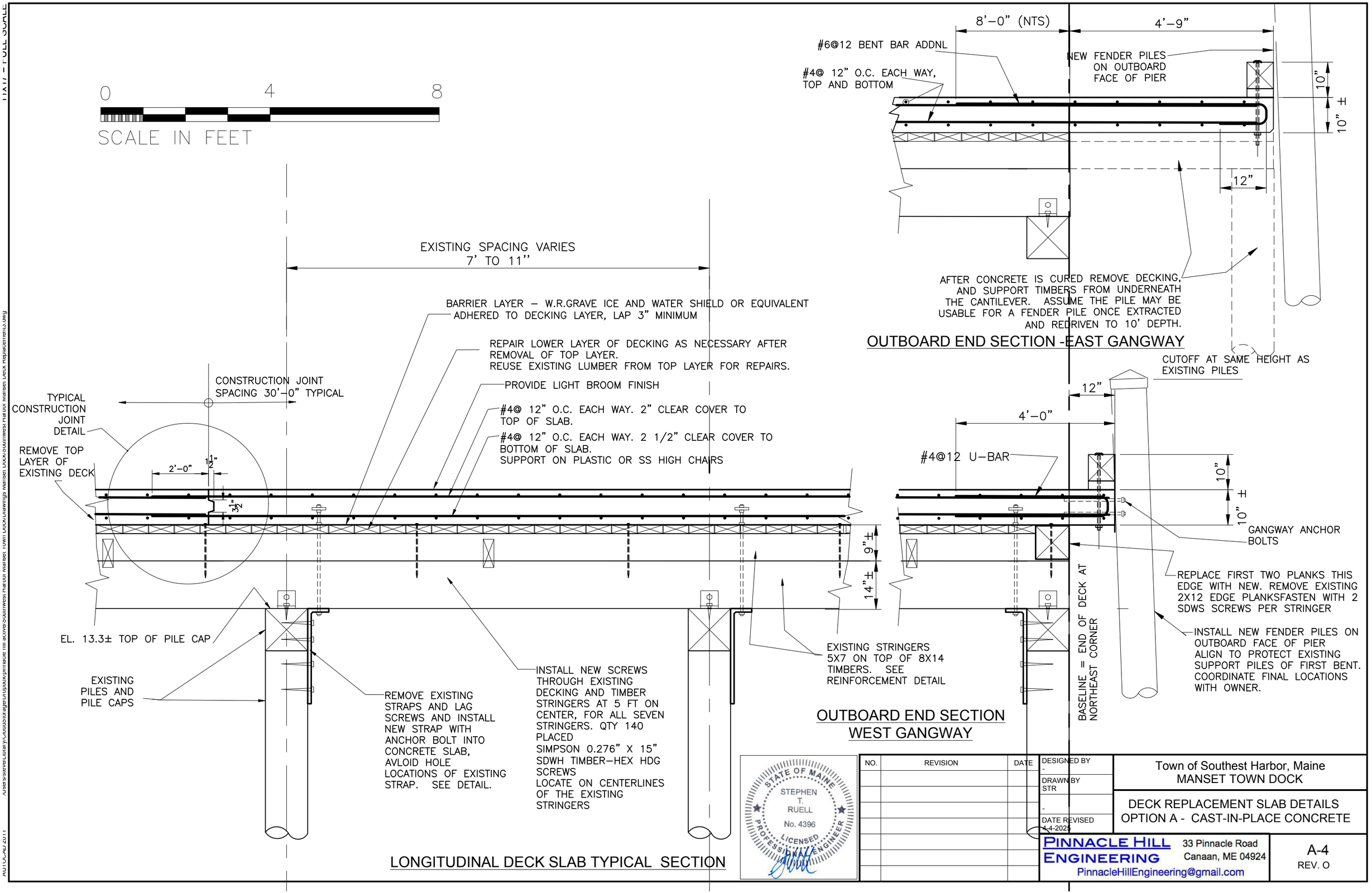
0
4
8
SCALE IN FEET
EXISTING SPACING VARIES
7' TO 11''
BARRIER LAYER – W.R.GRAVE ICE AND WATER SHIELD OR EQUIVALENT
ADHERED TO DECKING LAYER, LAP 3" MINIMUM
REPAIR LOWER LAYER OF DECKING AS NECESSARY AFTER
REMOVAL OF TOP LAYER.
REUSE EXISTING LUMBER FROM TOP LAYER FOR REPAIRS.
PROVIDE LIGHT BROOM FINISH
#4@ 12" O.C. EACH WAY. 2" CLEAR COVER TO
TOP OF SLAB.
#4@ 12" O.C. EACH WAY. 2 1/2" CLEAR COVER TO
BOTTOM OF SLAB.
SUPPORT ON PLASTIC OR SS HIGH CHAIRS
CONSTRUCTION JOINT
SPACING 30'–0" TYPICAL
TYPICAL
CONSTRUCTION
JOINT
DETAIL
REMOVE TOP
LAYER OF
EXISTING DECK
2'–0"
1 1/2"
1 1/2"
9"±
14"±
EL. 13.3± TOP OF PILE CAP
EXISTING
PILES AND
PILE CAPS
REMOVE EXISTING
STRAPS AND LAG
SCREWS AND INSTALL
NEW STRAP WITH
ANCHOR BOLT INTO
CONCRETE SLAB,
AVLOID HOLE
LOCATIONS OF EXISTING
STRAP. SEE DETAIL.
INSTALL NEW SCREWS
THROUGH EXISTING
DECKING AND TIMBER
STRINGERS AT 5 FT ON
CENTER, FOR ALL SEVEN
STRINGERS. QTY 140
PLACED
SIMPSON 0.276" X 15"
SDWH TIMBER–HEX HDG
SCREWS
LOCATE ON CENTERLINES
OF THE EXISTING
STRINGERS
EXISTING STRINGERS
5X7 ON TOP OF 8X14
TIMBERS. SEE
REINFORCEMENT DETAIL
LONGITUDINAL DECK SLAB TYPICAL SECTION
8'–0" (NTS)
4'–9"
#6@12 BENT BAR ADDNL
#4@ 12" O.C. EACH WAY,
TOP AND BOTTOM
NEW FENDER PILES
ON OUTBOARD
FACE OF PIER
10"
10" ±
12"
AFTER CONCRETE IS CURED REMOVE DECKING,
AND SUPPORT TIMBERS FROM UNDERNEATH
THE CANTILEVER. ASSUME THE PILE MAY BE
USABLE FOR A FENDER PILE ONCE EXTRACTED
AND REDRIVEN TO 10' DEPTH.
OUTBOARD END SECTION -EAST GANGWAY
CUTOFF AT SAME HEIGHT AS
EXISTING PILES
12"
4'–0"
#4@12 U–BAR
10"
10" ±
GANGWAY ANCHOR
BOLTS
BASELINE = END OF DECK AT
NORTHEAST CORNER
REPLACE FIRST TWO PLANKS THIS
EDGE WITH NEW. REMOVE EXISTING
2X12 EDGE PLANKSFASTEN WITH 2
SDWS SCREWS PER STRINGER
INSTALL NEW FENDER PILES ON
OUTBOARD FACE OF PIER
ALIGN TO PROTECT EXISTING
SUPPORT PILES OF FIRST BENT.
COORDINATE FINAL LOCATIONS
WITH OWNER.
OUTBOARD END SECTION
WEST GANGWAY
STATE OF MAINE
STEPHEN
T.
RUELL
No. 4396
LICENSED
PROFESSIONAL ENGINEER
NO.
REVISION
DATE
DESIGNED BY
-
DRAWN BY
STR
-
DATE REVISED
4-4-2025
Town of Southest Harbor, Maine
MANSET TOWN DOCK
DECK REPLACEMENT SLAB DETAILS
OPTION A - CAST-IN-PLACE CONCRETE
PINNACLE HILL
ENGINEERING
33 Pinnacle Road
Canaan, ME 04924
PinnacleHillEngineering@gmail.com
A-4
REV. O

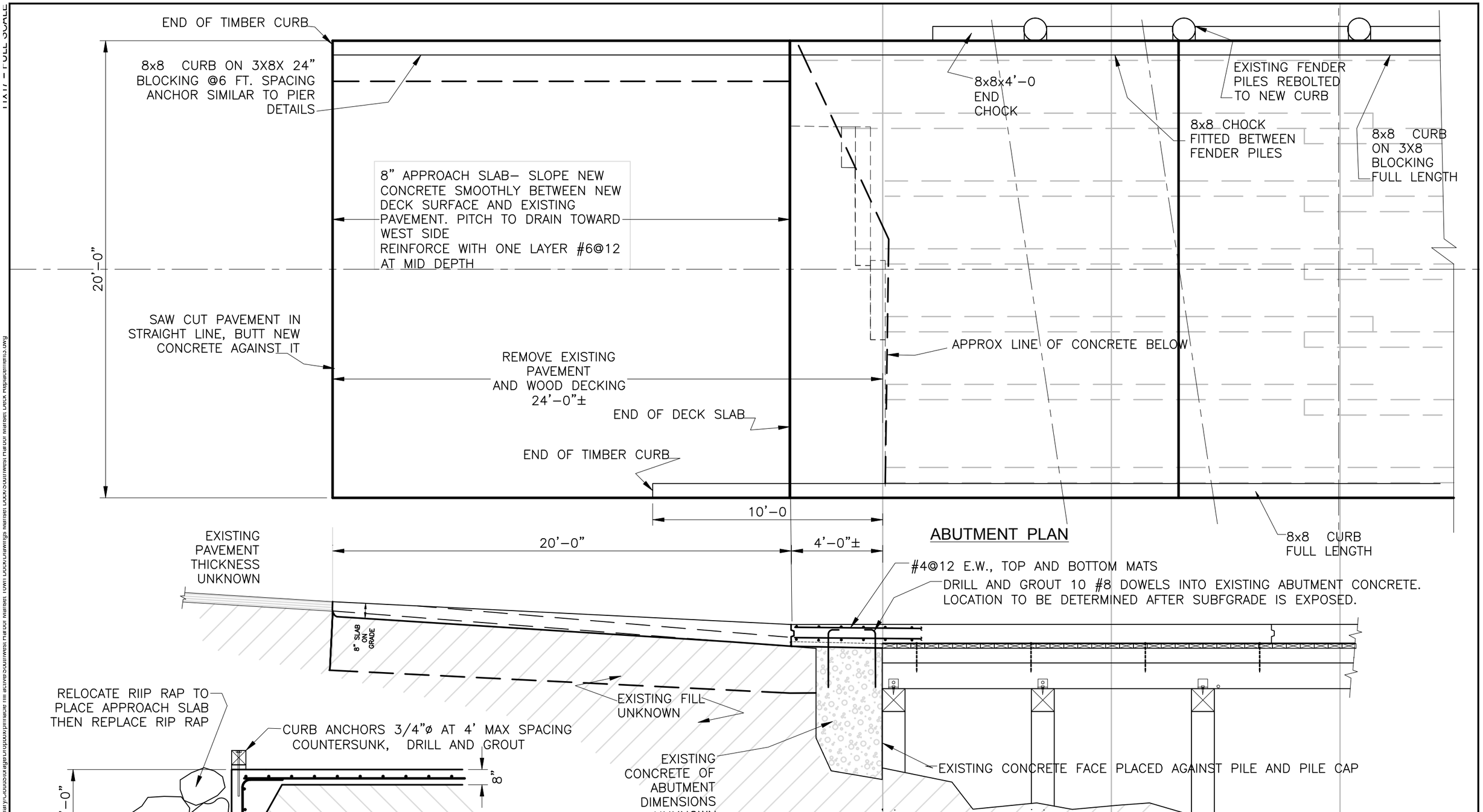

STATE OF MAINE
STEPHEN T. RUELL
No. 4396
LICENSED PROFESSIONAL ENGINEER

NO.	REVISION	DATE

DESIGNED BY -
DRAWN BY STR
-
DATE REVISED 4-4-2025

Town of Southest Harbor, Maine
MANSET TOWN DOCK

DECK REPLACEMENT ABUTMENT
OPTION A - CAST-IN-PLACE CONCRETE

PINNACLE HILL ENGINEERING
33 Pinnacle Road
Canaan, ME 04924
PinnacleHillEngineering@gmail.com

A-5
REV. O

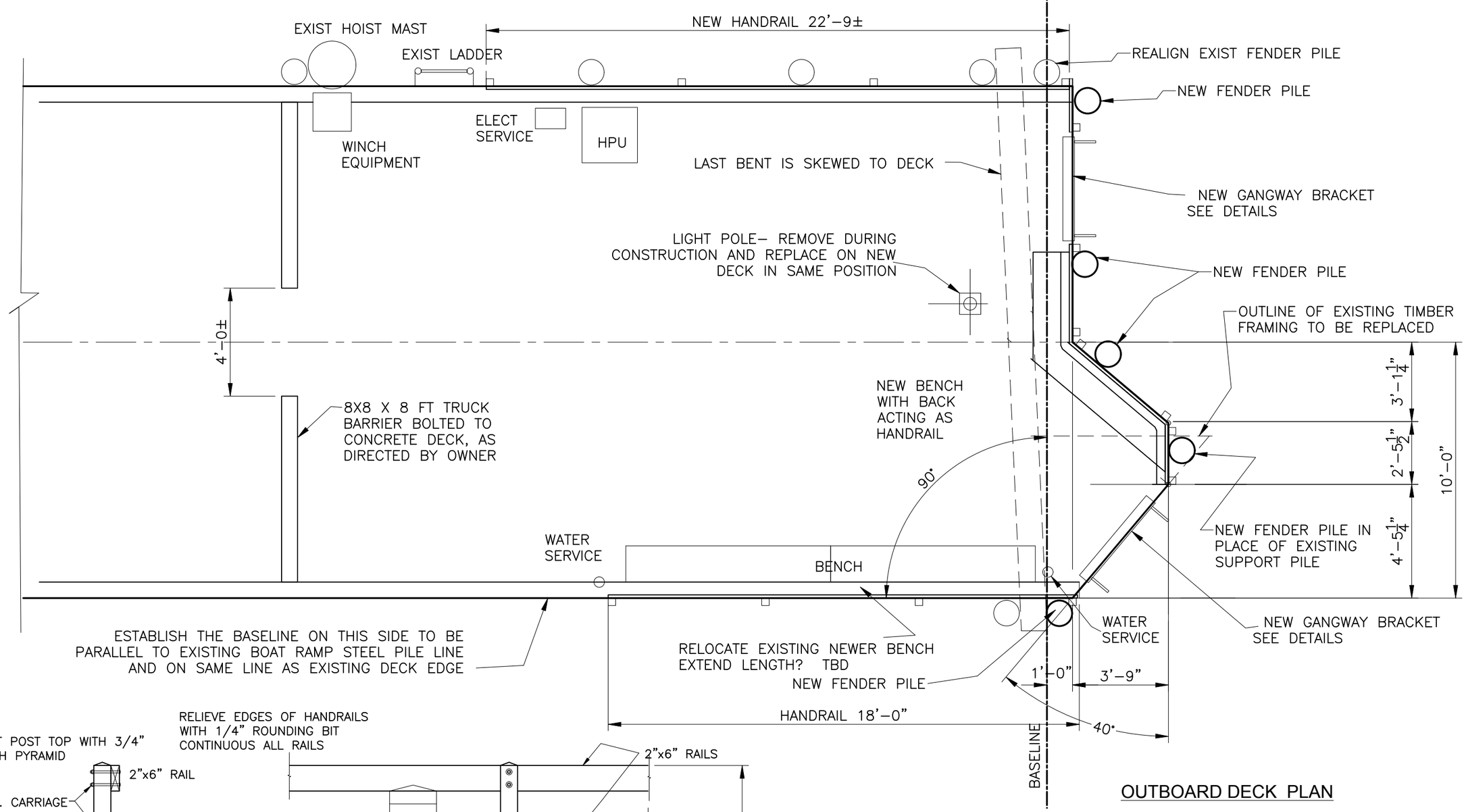

OUTBOARD DECK PLAN

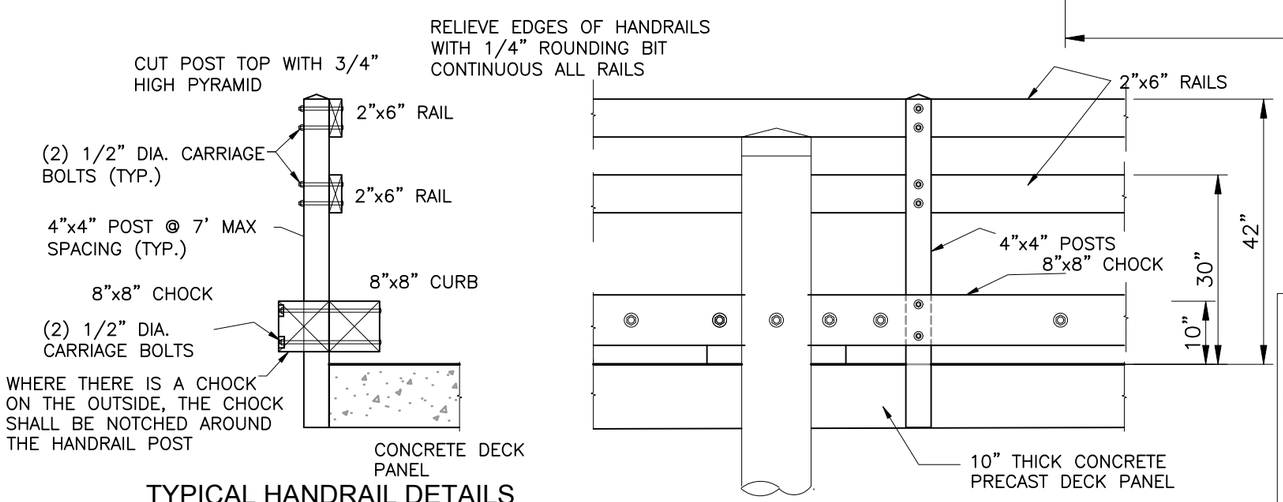

TYPICAL HANDRAIL DETAILS

STATE OF MAINE
STEPHEN T. RUELL
No. 4396
LICENSED
PROFESSIONAL ENGINEER

NO.	REVISION	DATE

DESIGNED BY -
DRAWN BY STR
-
DATE REVISED 4-4-2025

Town of Southest Harbor, Maine
MANSET TOWN DOCK

DECK REPLACEMENT OUTBOARD PLAN
OPTION A - CAST-IN-PLACE CONCRETE

PINNACLE HILL ENGINEERING
33 Pinnacle Road
Canaan, ME 04924
PinnacleHillEngineering@gmail.com

A-6
REV. O

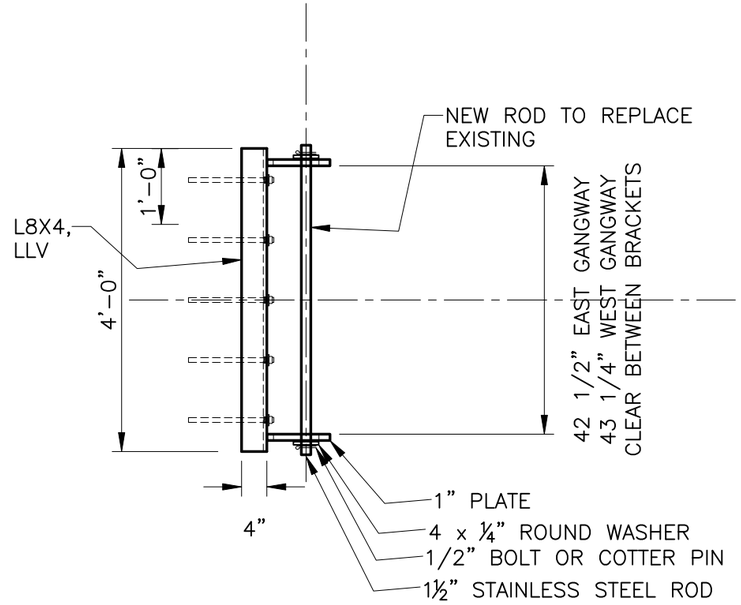

PLAN VIEW GANGWAY HINGE

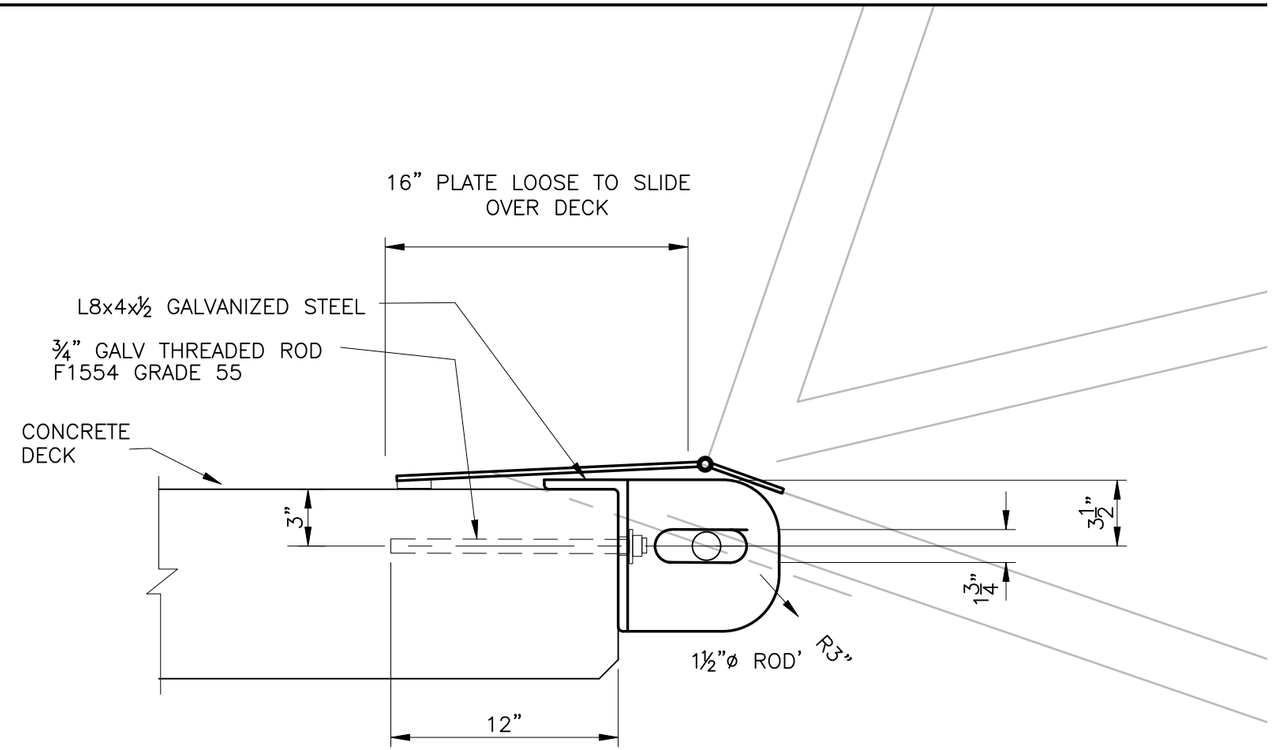

GANGWAY HINGE SECTION

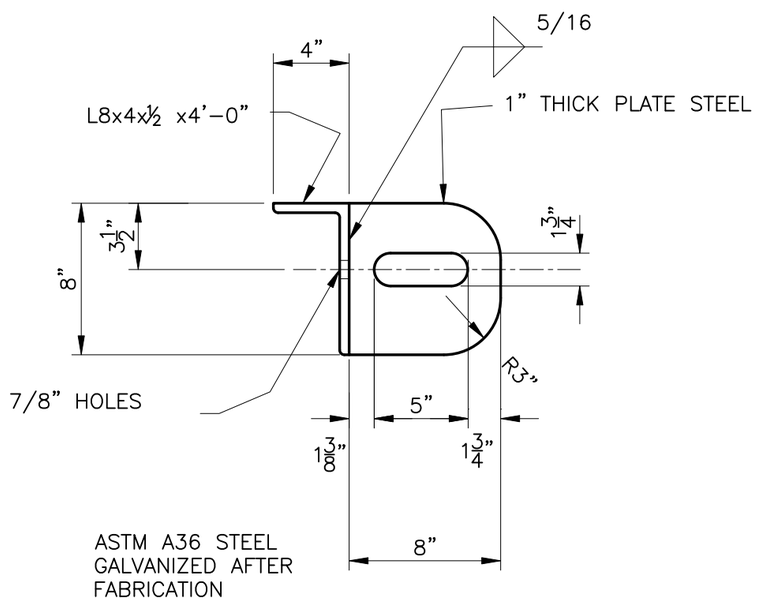

GANGWAY HINGE BRACKET DETAIL

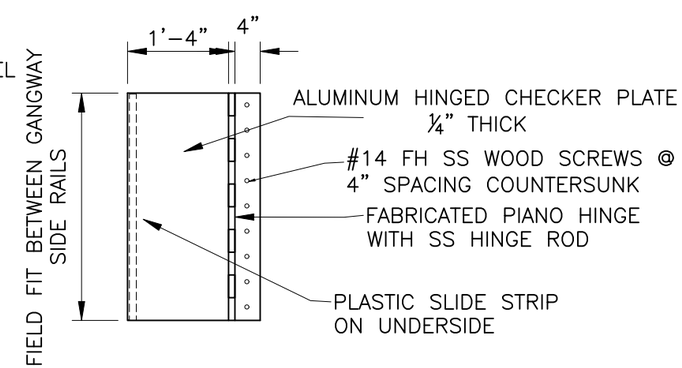

TRANSITION PLATE

STATE OF MAINE
STEPHEN T. RUELL
No. 4396
LICENSED PROFESSIONAL ENGINEER

NO.	REVISION	DATE

DESIGNED BY -
DRAWN BY STR
-
DATE REVISED 4-4-2025

Town of Southest Harbor, Maine
MANSET TOWN DOCK

DECK REPLACEMENT GANGWAY DE
OPTION A - CAST-IN-PLACE CONCR

PINNACLE HILL ENGINEERING
33 Pinnacle Road
Canaan, ME 04924
PinnacleHillEngineering@gmail.com

A-
REV.

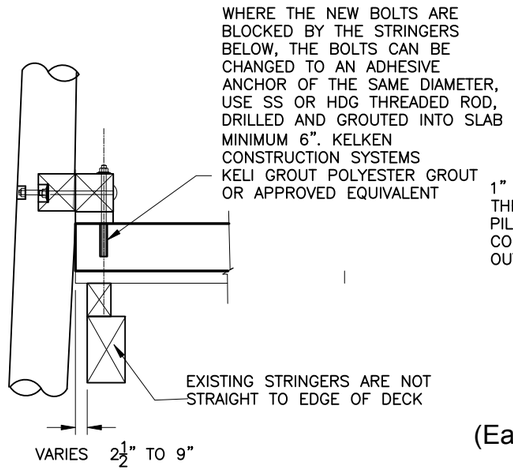

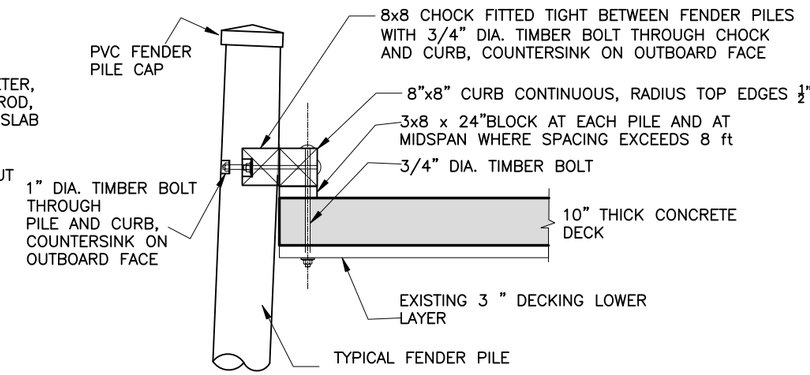

WEST SIDE FENDER PILE AND CURB DETAIL

(East side curb mounting as shown but without fenders and chocks)

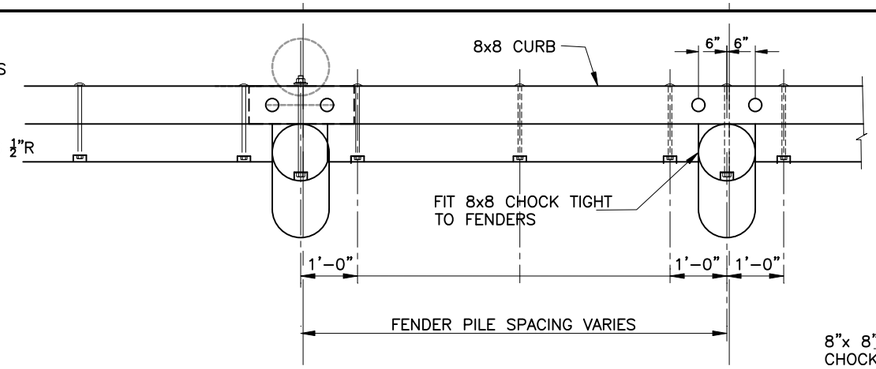

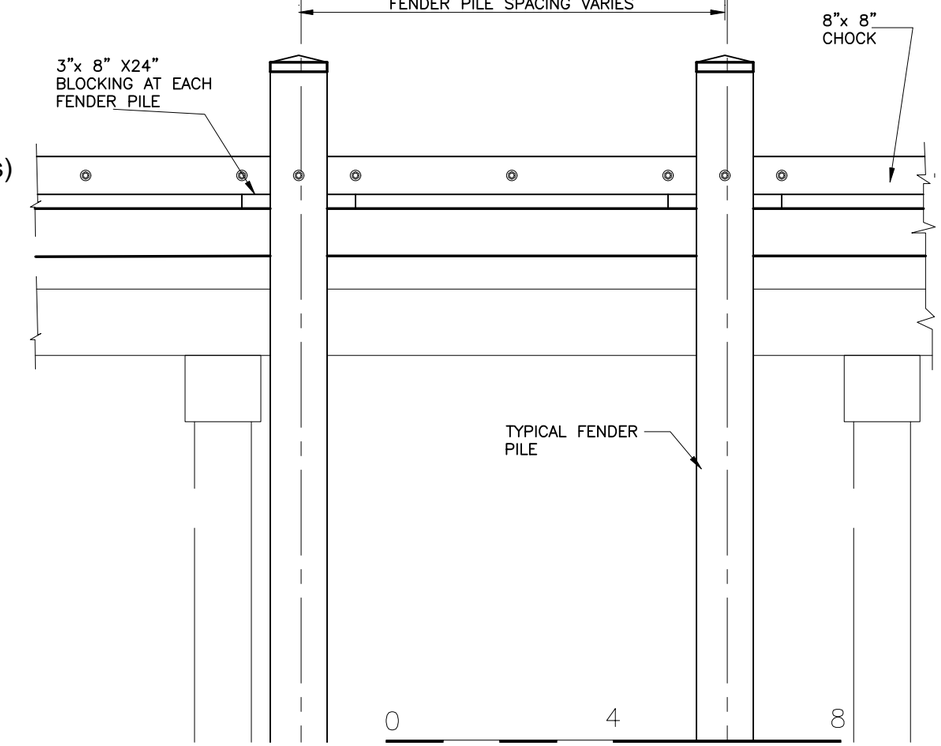

FENDER PILE PLAN AND ELEVATION

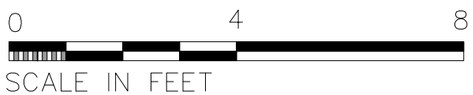

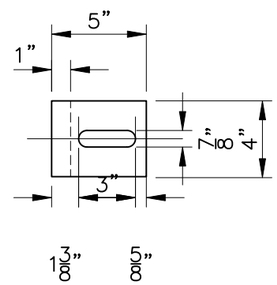

DECK ANCHORAGE
L-BAR TOP VIEW

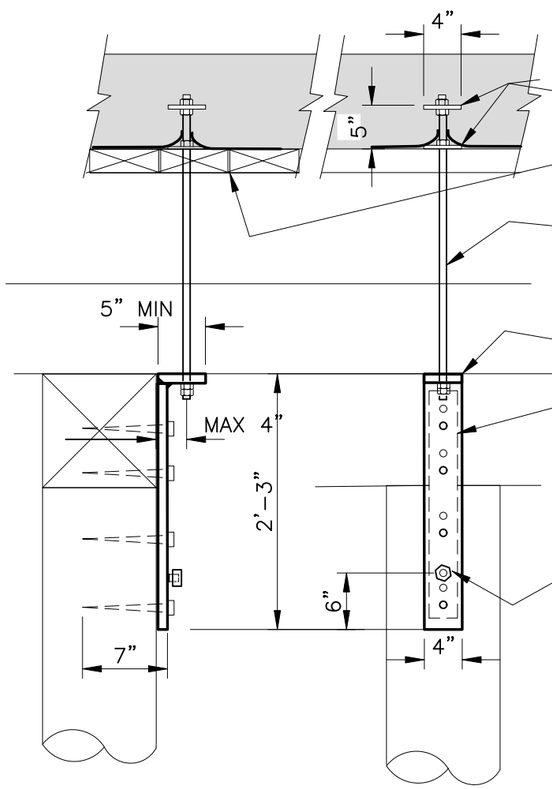

4x4x1/2 plate washers

CONTRACTOR MAY WISH TO REMOVE A PLANK OR MAKE AN OPENING DURING INSTALLATION OF RODS TO LOCATE PILE CAP BELOW, LOCATE DRILL

DRILL THROUGH DECK AND STRINGERS TO INSTALL 1"ø X 32" ALL-THREAD ROD, BOTTOM NUTS SHALL BE NYLOCK NUTS OR DOUBLE NUTTED
HOT DIPPED GALVANIZED A36 STEEL AT SOME PILE LOCATIONS THE ROD MAY BE OUTSIDE THE STRINGERS

TOP PLATE, SEE DETAIL

REPLACE EXISTING 3"x½"x24" STEEL BAR AND LAG SCREWS WITH NEW 4"x1" BENT OR WELDED L-BAR
FOUR NEW LAG SCREWS 7"x ¾"ø. LOCATE NEW FASTENERS TO MISS THE EXISTING FASTENER HOLES BY AT LEAST 1½". ALL PARTS HOT DIP GALVANIZED (HDG)

ZINC CAP NUT TRUMBULL 6 OZ. 364-1006 OR EQUAL MOUNTED ON ¾"-10 NC WELDED THREADED STUD

CONTRACTOR SHALL TRY TO CENTER THE NEW PLATE ON THE PILE BUT AT SOME LOCATIONS THE PILE IS NOT BELOW THE STRINGER, SO THE ROD WILL NOT GO THROUGH THE STRINGERS.

INSTALL THIS DETAIL ON ALL PILES EXCEPT FIRST TWO BENTS, TOTAL OF 88 ASSEMBLIES REQUIRED.

DECK ANCHORAGE ASSEMBLY DETAIL

STATE OF MAINE
STEPHEN T. RUELL
No. 4396
LICENSED
PROFESSIONAL ENGINEER

NO.	REVISION	DATE

DESIGNED BY -
DRAWN BY STR
-
DATE REVISED 4-4-2025

Town of Southest Harbor, Maine
MANSET TOWN DOCK

DECK REPLACEMENT FENDER DETAILS
OPTION A - CAST-IN-PLACE CONCRETE

PINNACLE HILL ENGINEERING
33 Pinnacle Road
Canaan, ME 04924
PinnacleHillEngineering@gmail.com

A-8
REV. O

AUTOCAD 2011
/users/steve/Library/Mobile Documents/com~apple~CloudDocs/pinnacle hill archive/Southwest Harbor Manset Town Dock/Southwest Harbor Manset Town Dock/drawings/Manset Dock Replacement.dwg
FULL SCALE

OUTLINE SPECIFICATIONS

1. THESE ARE GENERAL NOTES APPLYING TO ALL WORK. WHERE SPECIFIC NOTES ARE SHOWN ON OTHER DRAWINGS, THOSE NOTES SHALL TAKE PRECEDENCE.

2. ELEVATION REFERENCE: ELEVATIONS SHOWN ON THE DRAWINGS ARE APPROXIMATELY ON MEAN LOWER LOW WATER DATUM.

3. STRUCTURAL DESIGN RATING – AASHTO H20–44 LOADING.

SITE PREPARATION

A. SEE PLANS FOR TEMPORARY CLOSURES OF WHARF, SUBJECT TO OWNER APPROVAL. MAINTAIN USE OF PUBLIC RAMP FOR THE PUBLIC DURING THE PROJECT TO THE EXTENT PRACTICAL. CLEARLY POST NOTICES OF PLANNED CLOSURES AND ALTERNATIVE ACCESS. LIMIT TIME BOAT LAUNCH RAMP IS OUT OF OPERATION.

B. PROVIDE BARRICADES AND SAFETY PROVISIONS DURING CONSTRUCTION WHERE REQUIRED.

CONCRETE

A. ALL WORK SHALL CONFORM TO ACI 318, ACI 301 AND ACI 347, LATEST EDITIONS.

B. SPECIFICATIONS

a. MINIMUM 28 DAY STRENGTH = 5000 PSI FOR CONCRETE DECK PANELS. 4000 PSI FOR CAST–IN PLACE CONCRETE. SEE SPECIFICATIONS FOR OTHER RESTRICTIONS ON CEMENT.

b. MAXIMUM WATER/CEMENT RATIO = 0.40,

c. SLUMP 3"± 1"

d. AIR CONTENT PROVIDED BY AIR ENTRAINMENT ADMIXTURE 5% TO 7%, AS MEASURED BY ASTM C231

e. WATER REDUCING ADMIXTURE SHALL BE USED AT THE OPTION OF THE CONTRACTOR

f. ADMIXTURES CONTAINING CALCIUM CHLORIDE SHALL NOT BE USED.

g. DCI ADMIXTURE FROM WR GRACE SHALL BE USED IN DECK PANELS, AT RATE 4 GALS/CY

C. CURE CONCRETE ABOVE 50 DEGREES F AND IN MOIST CONDITIONS FOR 7 DAYS MINIMUM. DO NOT APPLY LOADS TO NEW CONCRETE FOR AT LEAST 7 DAYS UNLESS APPROVED BY THE ENGINEER.

D. CONFORM TO ACI REQUIREMENTS FOR COLD WEATHER CONCRETING. PROTECT FRESH CONCRETE FROM FREEZING. HEAT FORMS AND REINFORCEMENT TO ABOVE FREEZING PRIOR TO PLACEMENT.

E. PROVIDE WOOD FLOAT FINISH ON TOP SURFACE OF DECK PANELS. CAREFULLY SCREED ALL SURFACES FOR DRAINAGE AND TO PREVENT PUDDLES.

F. COMPLY WITH MAINE DOT STANDARD SPECIFICATIONS.

G. CONCRETE REINFORCEMENT SPECIFICATION ASTM A615 GRADE 60, EPOXY COATED

B. SPLICES SHALL NOT BE USED EXCEPT AS SHOWN

C. HOOKS IN BARS DIMENSIONED AND BENT PER ACI STANDARD HOOKS.

D. REINFORCEMENT COVER, 3" CLEAR FOR BOTTOM OF DECK PANELS AND 2" CLEAR FOR TOP OF DECK PANELS.

GROUTED DOWELS

CLEAN DRILL HOLES WITH AIR PRESSURE TO REMOVE DUST, CHIPS, AND STANDING WATER. HOLES MAY BE DAMP.

GROUT SHALL BE NON–SHRINK PROPRIETARY CEMENT GROUT (4,000 PSI MINIMUM), SUCH AS FIVE–STAR GROUT, OR APPROVED POLYESTER GROUT (SUCH AS KELI GROUT), AT CONTRACTOR'S OPTION. SELECTED GROUT MUST BE SUITABLE FOR USE IN WET HOLES.AND TEMPERATURES DURING INSTALLATION. FOLLOW. MANUFACTURER'S INSTRUCTIONS

STEEL

A. MATERIALS

STEEL ASTM A36 OR A992 U.N.O.

.STEEL FINISH

. WHERE INDICATED AS GALVANIZED, STEEL ITEMS SHALL BE HOT DIPPED GALVANIZED PER ASTM A123, AFTER FABRICATION. NO WELDING OR CUTTING OF GALVANIZED FABRICATIONS IN THE FIELD. REPAIR DAMAGED GALVANIZING WITH TWO COATS OF ZINC–OXIDE DUST PAINT CONFORMING TO MIL–P–21035.

. EXPOSED STEEL NOT GALVANIZED SHALL BE EPOXY COATED. PROVIDE APPROVED COAL TAR EPOXY POLYAMIDE MEETING FS QPL–2441 AND SSPC PAINT 16. APPLY TWO COATS OF 8 MILS MINIMUM, FOR A TOTAL OF 16 MILS MINIMUM..

C. BOLTS FOR STEEL CONNECTIONS –ASTM A325 GALVANIZED, UNLESS NOTED OTHERWISE.
BOLTS FOR IMBER CONNECTIONS – ASTM A307 GALVANIZED UNLESS NOTED OTHERWISE.

D. ALL EXPOSED BOLTS, FASTENERS, WASHERS AND HARDWARE SHALL BE HOT DIPPED GALVANIZED OR STAINLESS STEEL. ALL BOLTS SHALL HAVE WASHERS UNDER HEAD AND NUT ENDS. ALL WASHERS BELOW MHW SHALL BE GALVANIZED PLATE WASHERS OR DOCK WASHERS, MINIMUM 1/4" THICKNESS.

E. WELDING IN ACCORDANCE WITH ASTM D1.1. WELD ROD E70XX.

TIMBER

A. TIMBER PRESERVATIVE TREATMENT

a. PILES AND BRACING MEMBERS INDICATED TO BE TREATED FOR SALTWATER IMMERSION OR SPLASH SHALL BE PRESSURE TREATED WITH CCA (CHROMATED COPPER ARSENATE) TO AWPA USE CATEGORY 5A EXCEPT ANY TIMBER USED WITH ANY PORTION BELOW EXTREME HIGH WATER SHALL HAVE A MINIMUM RETENTION OF 2.5 PCF.

b. MEMBERS LOCATED ABOVE THE WATER LINE AND WHERE CONTACT WITH USERS MAY GENERALLY OCCUR SHALL BE A WATERBORNE COPPER–BASED PRESERVATIVE SUITABLE FOR AWPA USE CATEGORY 4B.
ACCEPTABLE CHEMICALS INCLUDE:

COPPER AZOLE (CA–B OR CA–C) –0.31 PCF

MICRONIZED COPPER AZOLE (uCA) –0.23 PCF

AMMONIACAL COPPER QUAT (ACQ–B) –0.60 PCF

MICRONIZED COPPER QUAT (MCQ) –0.60 PCF

c. SEE TIMBER SCHEDULE FOR USAGE CLASSIFICATION SPECIFIED. THE TIMBER SCHEDULE SHALL TAKE PRECEDENCE OVER THE ABOVE SPECIFICATIONS.

B. ALL CUTS, BOLT HOLES, COUNTERSINKING, AND ABRASIONS IN TREATED WOOD MATERIALS SHALL BE FIELD TREATED PER AWPA M4. USE FULL LENGTH MEMBERS TREATED AFTER CUTTING TO AVOID UNTREATED CUTS AND SPLICES. PURCHASE MEMBERS CUT TO LENGTH PRIOR TO TREATMENT TO THE EXTENT POSSIBLE.

STATE OF MAINE
STEPHEN T. RUELL
No. 4396
LICENSED PROFESSIONAL ENGINEER

NO.	REVISION	DATE

DESIGNED BY -
DRAWN BY STR
-
DATE REVISED 4-4-2025

Town of Southest Harbor, Maine
MANSET TOWN DOCK

GENERAL NOTES
OPTION A - CAST-IN-PLACE CONCRETE

PINNACLE HILL ENGINEERING
33 Pinnacle Road
Canaan, ME 04924
PinnacleHillEngineering@gmail.com

A-9
REV. O

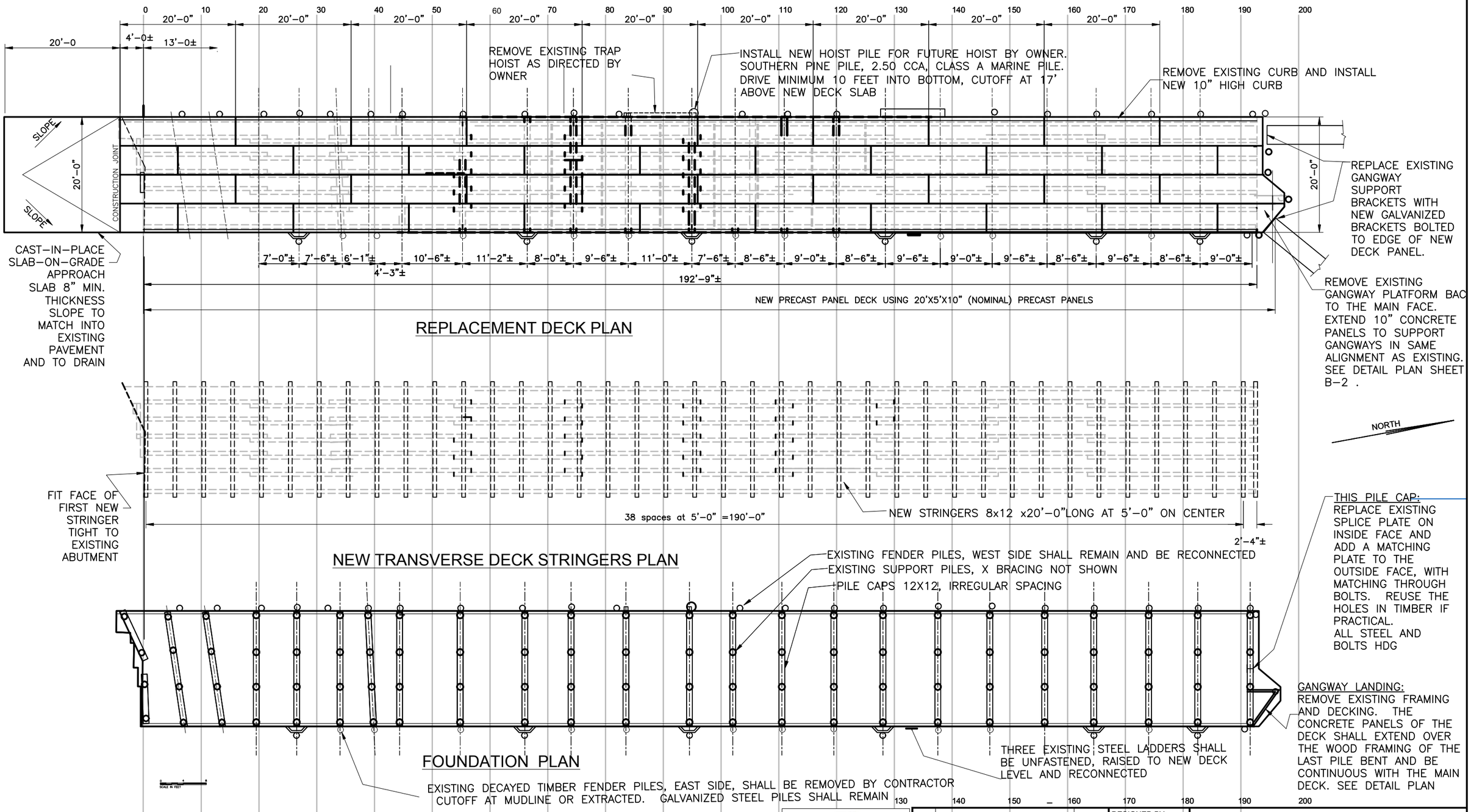

THIS DRAWING SHOWS EXISTING PIER MEASUREMENTS THAT ARE APPROXIMATE FOR ILLUSTRATION ONLY. THE EXISTING PIER IS ALSO IRREGULAR IN SPACING AND MANY PILE BENTS ARE NOT SQUARE OR PARALLEL. THE NEW DECK SHALL BE CONSTRUCTED WITH SQUARE AND PARALLEL EDGES, USING THE BOAT RAMP STEEL PILES AS THE BASELINE

WHERE REQUIRED CONTRACTOR SHALL VERIFY ALL DIMENSIONS AND LOCATIONS OF STRUCTURAL MEMBERS AND PILES, BEFORE PURCHASE OF MATERIALS.

THE LOCATIONS OF LAP SPLICES OF EXISTING FLOOR STRINGERS WERE NOT MEASURED, AND IF NECESSARY SHOULD BE CONFIRMED BY CONTRACTOR.

STATE OF MAINE
STEPHEN T. RUELL
No. 4396
LICENSED PROFESSIONAL ENGINEER

NO.	REVISION	DATE

DESIGNED BY -
DRAWN BY STR
-
DATE REVISED 4-4-2025

Town of Southest Harbor, Maine
MANSET TOWN DOCK

DECK REPLACEMENT PLAN
OPTION B - PRECAST CONCRETE

PINNACLE HILL ENGINEERING
33 Pinnacle Road
Canaan, ME 04924
PinnacleHillEngineering@gmail.com

B-1
REV. O

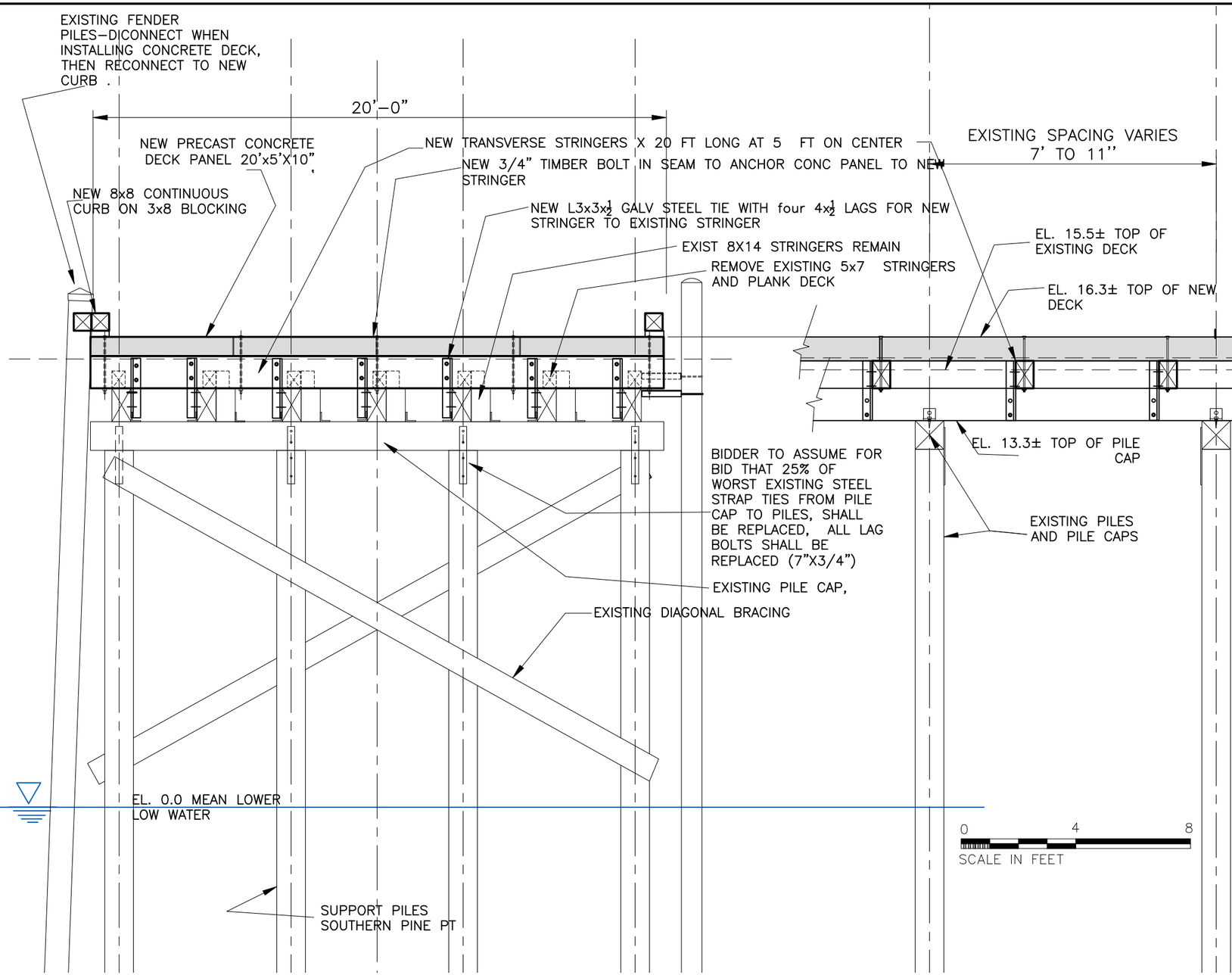

TYPICAL BENT ELEVATION

TYPICAL DECK LONGITUDINAL SECTION

OUTBOARD END SECTION -EAST GANGWAY

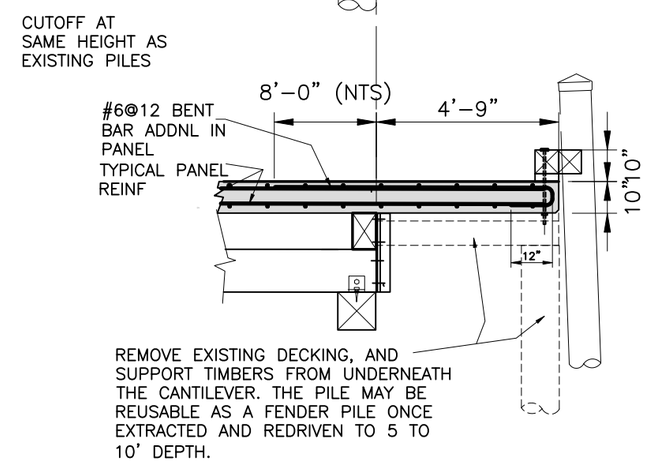

OUTBOARD END SECTION
WEST GANGWAY

STATE OF MAINE
STEPHEN T. RUELL
No. 4396
LICENSED
PROFESSIONAL ENGINEER

NO.	REVISION	DATE

DESIGNED BY -
DRAWN BY STR
-
DATE REVISED 4-4-2025

Town of Southest Harbor, Maine
MANSET TOWN DOCK

DECK REPLACEMENT SECTIONS
OPTION B - PRECAST CONCRETE

PINNACLE HILL ENGINEERING
33 Pinnacle Road
Canaan, ME 04924
PinnacleHillEngineering@gmail.com

B-2
REV. O

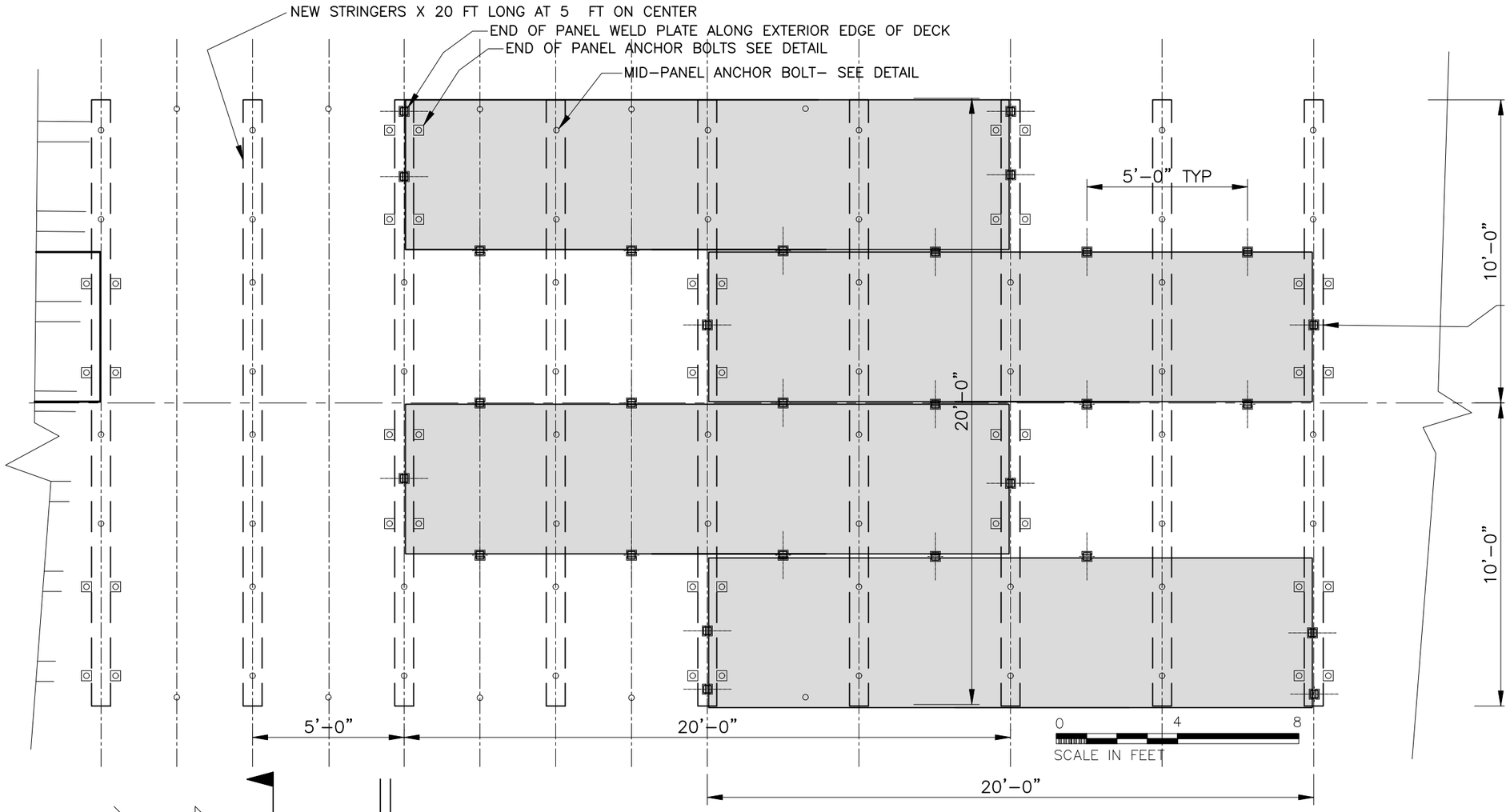

TYPICAL PRECAST PANEL LAYOUT PATTERN

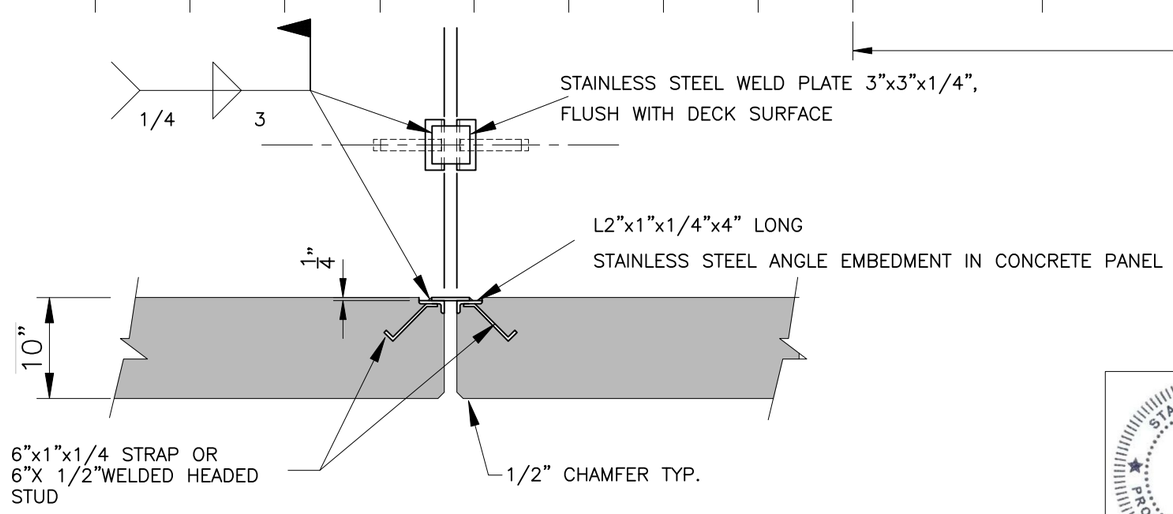

TYPICAL WELD PLATE
PANEL CONNECTION DETAIL

STATE OF MAINE
STEPHEN T. RUELL
No. 4396
LICENSED
PROFESSIONAL ENGINEER

NO.	REVISION	DATE

DESIGNED BY STR
DRAWN BY -STR
-
DATE REVISED 4-4-25

Town of Southest Harbor, Maine
MANSET TOWN DOCK

DECK REPLACEMENT PANEL DETAILS
OPTION B - PRECAST CONCRETE

PINNACLE HILL ENGINEERING
33 Pinnacle Road
Canaan, ME 04924
PinnacleHillEngineering@gmail.com

B-3
REV. O

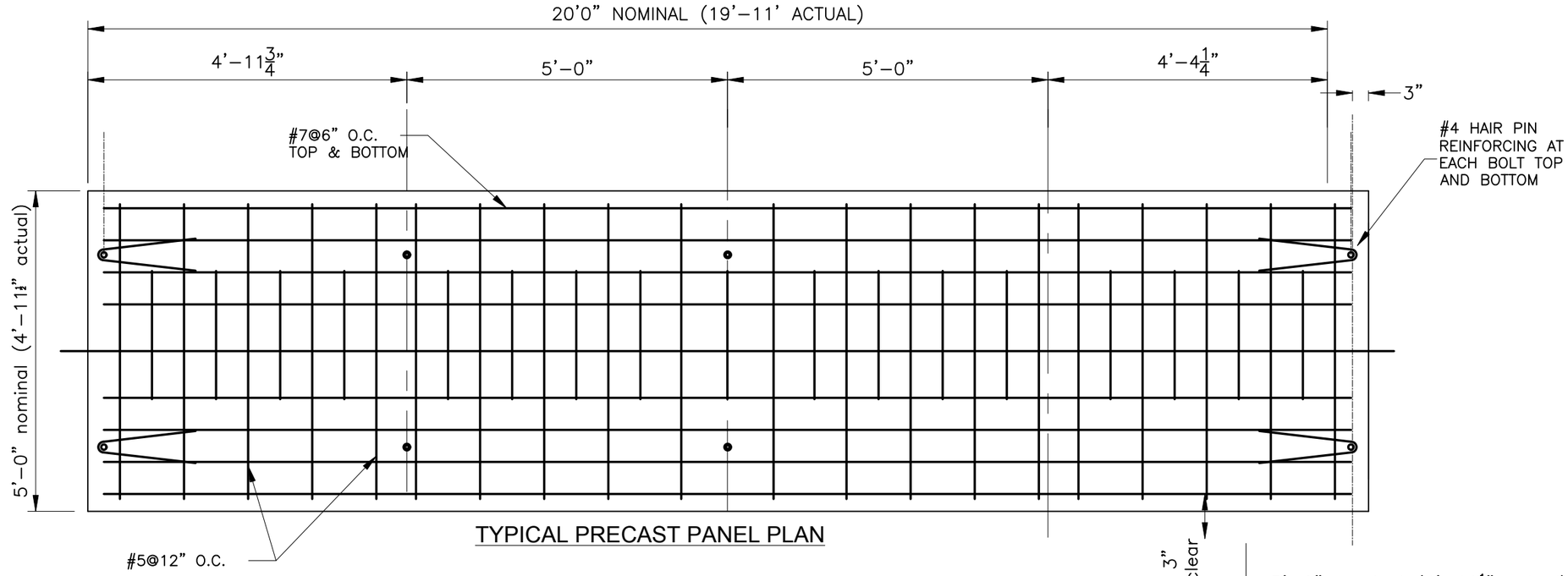

TYPICAL PRECAST PANEL PLAN

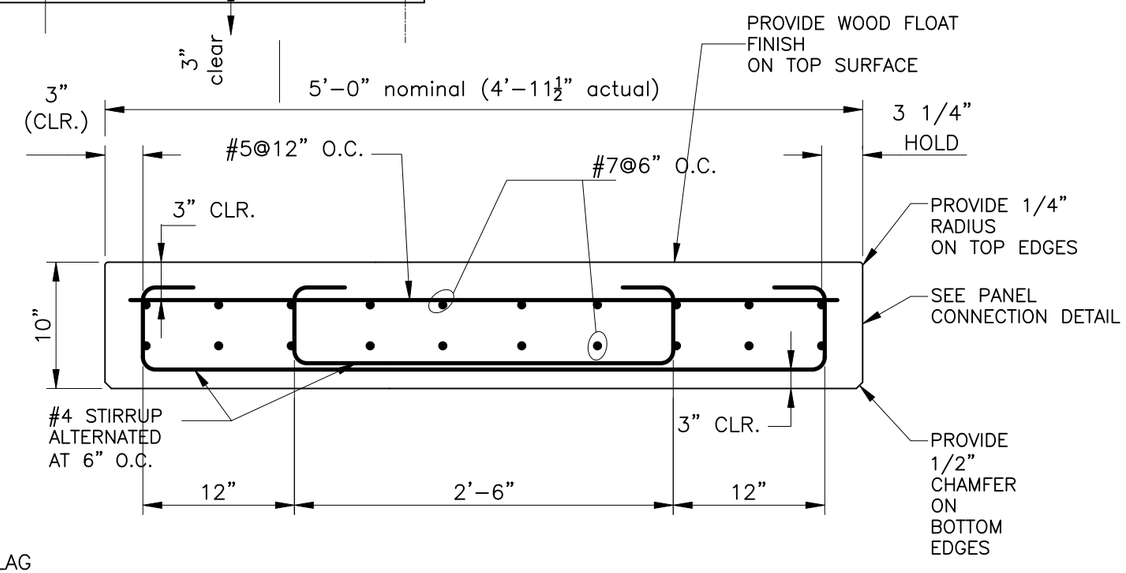

TYPICAL PRECAST PANEL SECTION

SCALE 1"= 1'-0"

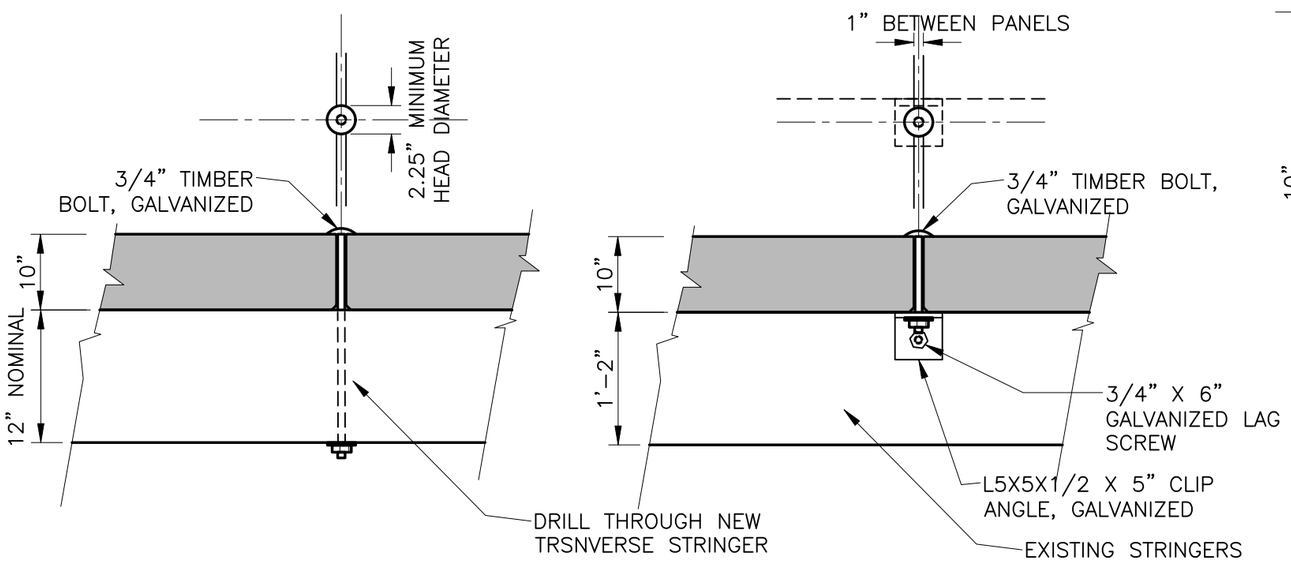

TYPICAL TIMBER BOLT FASTENERS DETAIL

NOTE:

FASTENERS INSTALLED IN GAP BETWEEN PANELS ALONG INTERIOR EDGES OF ALL PANELS, AT EVERY STRINGER, SEE PLAN. USE EITHER DETAIL AS APPLICABLE

0 1 2 3 4

SCALE IN FEET

STATE OF MAINE
STEPHEN T. RUELL
No. 4396
LICENSED PROFESSIONAL ENGINEER

NO.	REVISION	DATE

DESIGNED BY STR
DRAWN BY -STR
-
DATE REVISED 4-4-25

Town of Southest Harbor, Maine
MANSET TOWN DOCK

DECK REPLACEMENT PANEL DETAILS
OPTION B - PRECAST CONCRETE

PINNACLE HILL ENGINEERING
33 Pinnacle Road
Canaan, ME 04924
PinnacleHillEngineering@gmail.com

B-4
REV. O

FULL SCALE

AV 1/2/2025 11:27

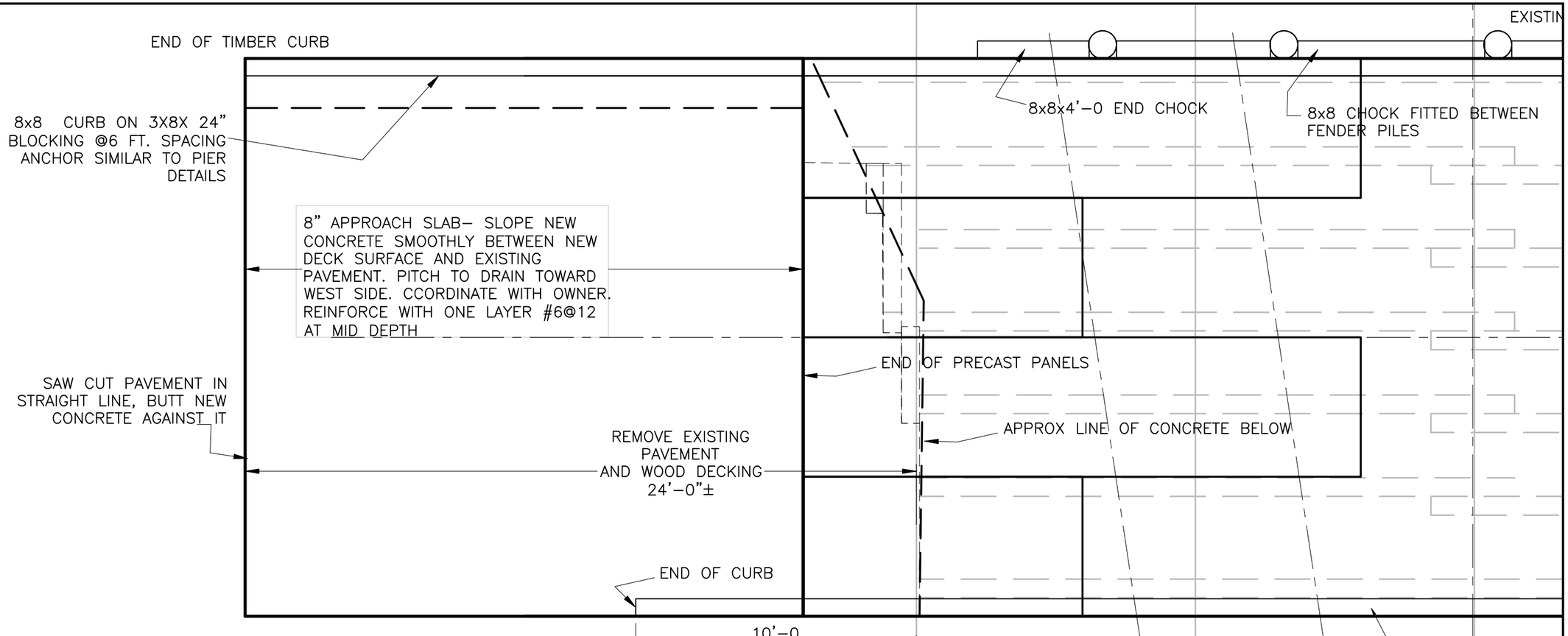

ABUTMENT PLAN

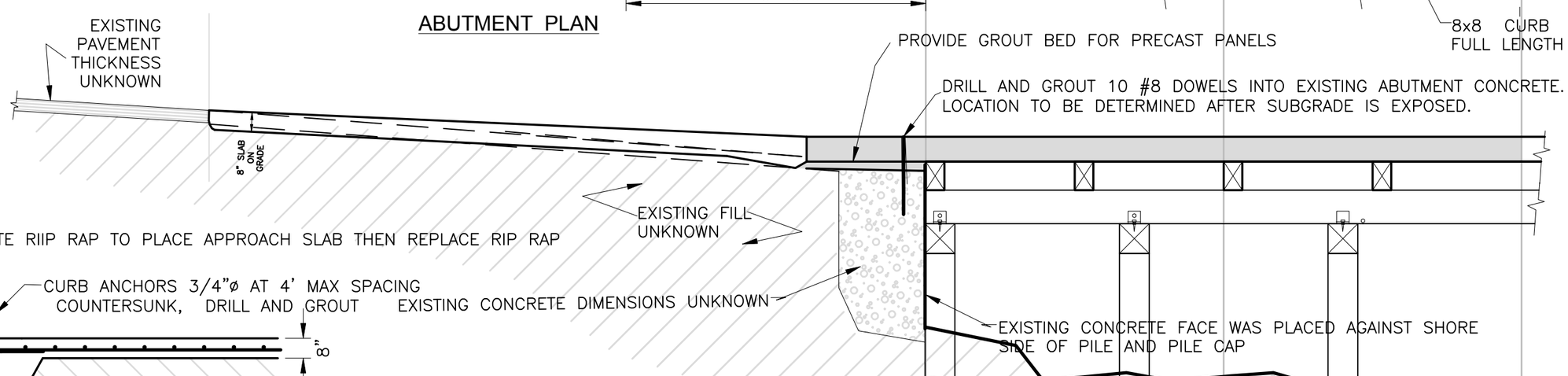

ABUTMENT SECTION

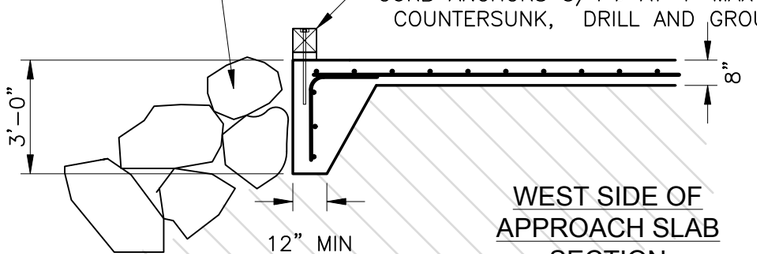

WEST SIDE OF APPROACH SLAB SECTION

0 4 8
SCALE IN FEET

STATE OF MAINE
STEPHEN T. RUELL
No. 4396
LICENSED
PROFESSIONAL ENGINEER

NO.	REVISION	DATE
0		

DESIGNED BY -
DRAWN BY STR
-
DATE REVISED 4-4-2025

Town of Southest Harbor, Maine
MANSET TOWN DOCK

DECK REPLACEMENT ABUTMENT
OPTION B - PRECAST CONCRETE

PINNACLE HILL ENGINEERING
33 Pinnacle Road
Canaan, ME 04924
PinnacleHillEngineering@gmail.com

20
B-5
REV. O

AUTOCAD 2011
/Users/steve/Library/Mobile Documents/com~apple~CloudDocs/pinnacle hill archive/southwest harbor manset town dock/drawings manset dock(option b).dwg
11X17 - FULL SCALE

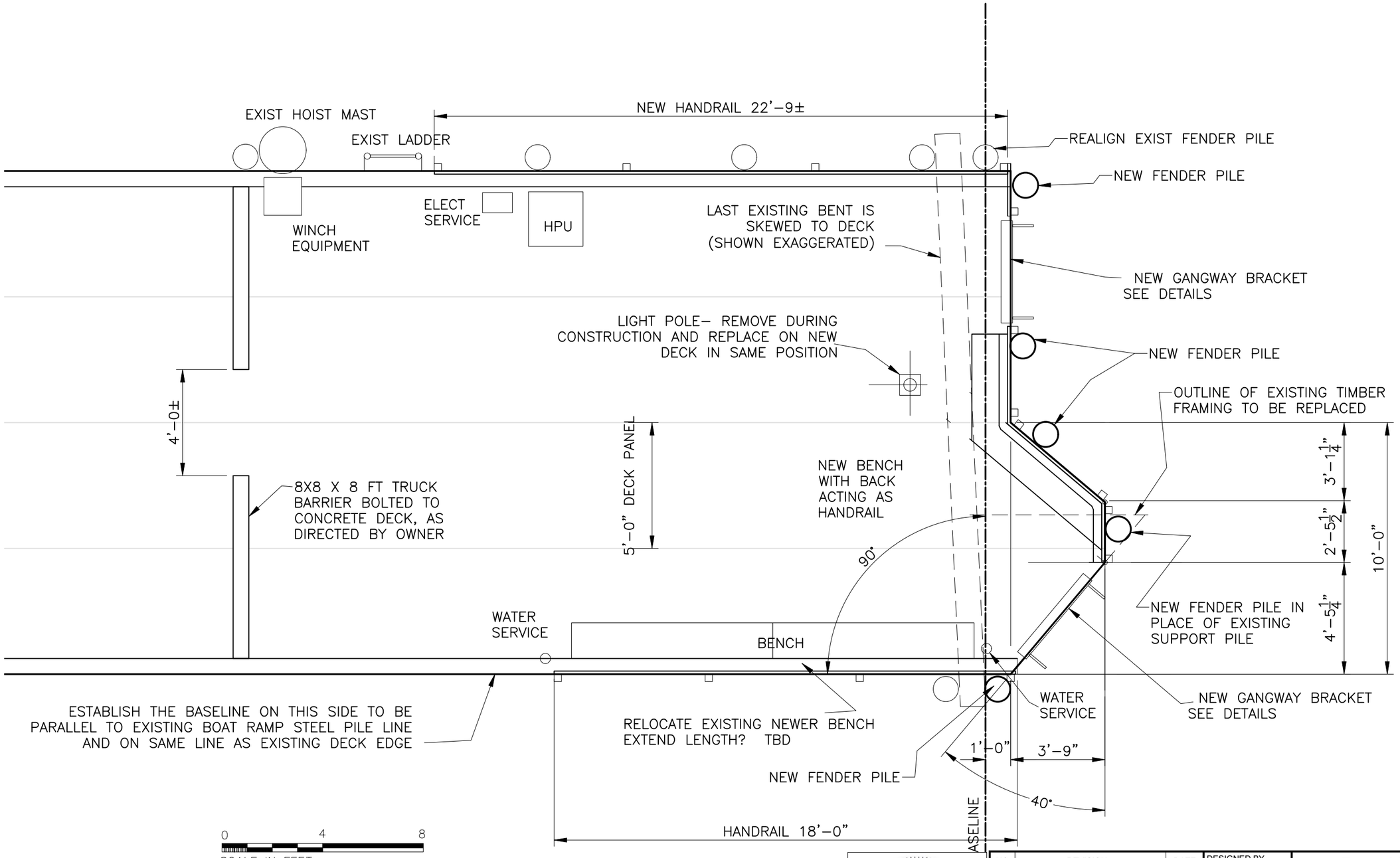

PARTIAL PLAN - OUTBOARD END OF DECK

STATE OF MAINE
STEPHEN T. RUELL
No. 4396
LICENSED PROFESSIONAL ENGINEER

NO.	REVISION	DATE

DESIGNED BY -
DRAWN BY STR
-
DATE REVISED 4-4-2025

Town of Southest Harbor, Maine
MANSET TOWN DOCK

DECK REPLACEMENT OUTBOARD PLAN
OPTION B - PRECAST CONCRETE

PINNACLE HILL ENGINEERING
33 Pinnacle Road
Canaan, ME 04924
PinnacleHillEngineering@gmail.com

B-6
REV. O

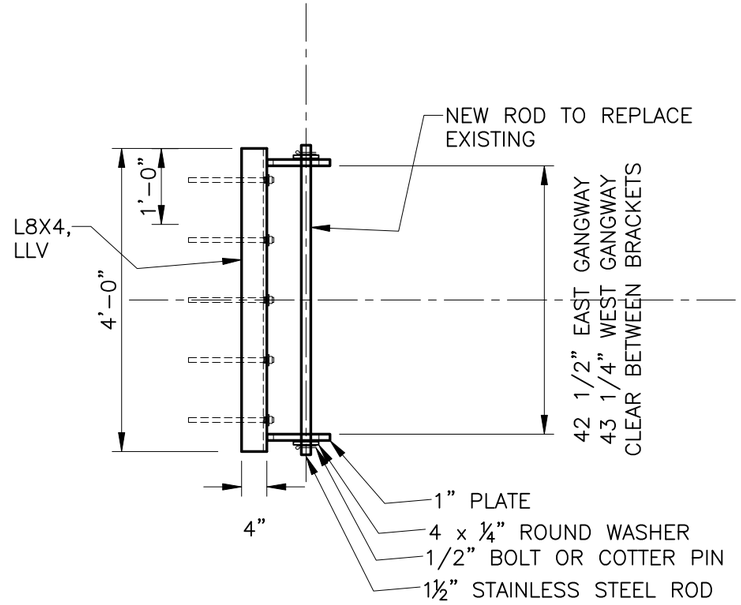

PLAN VIEW GANGWAY HINGE

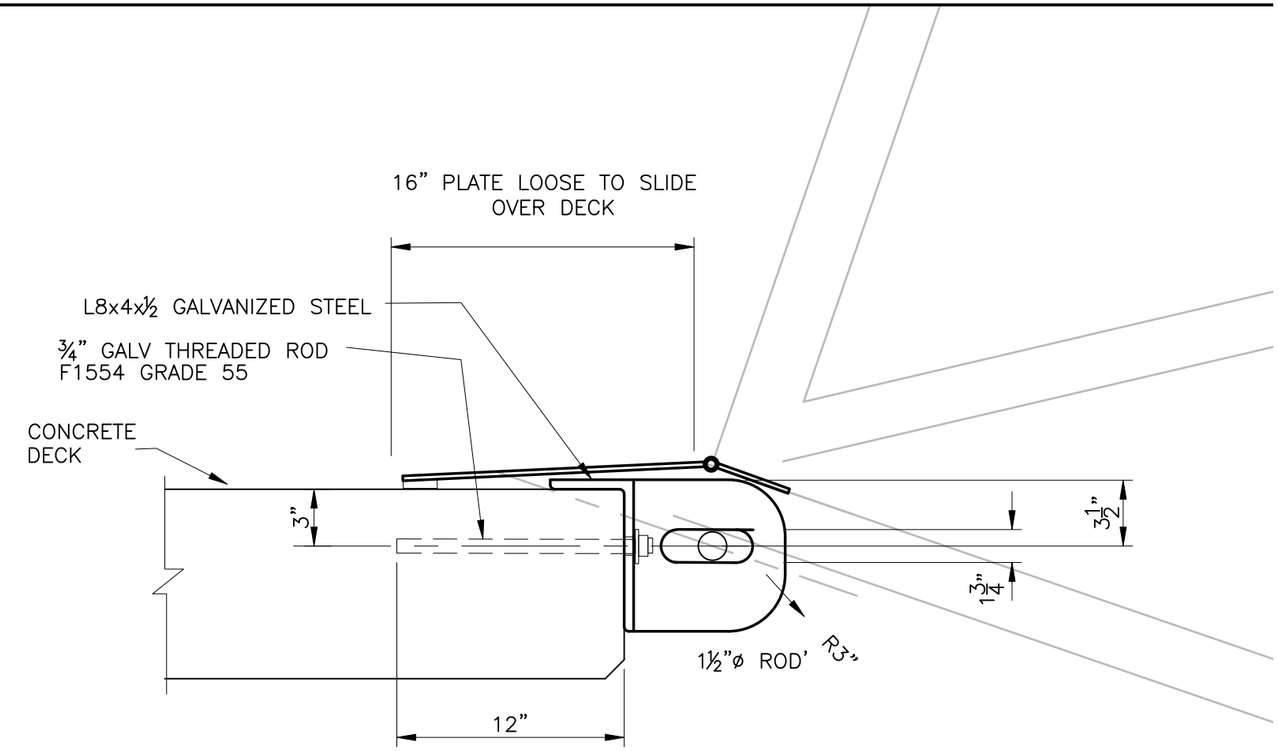

GANGWAY HINGE SECTION

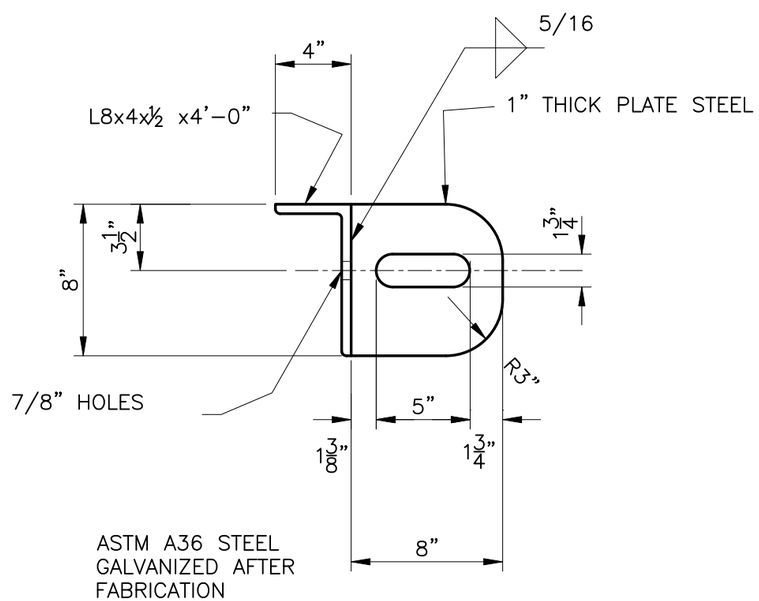

GANGWAY HINGE BRACKET DETAIL

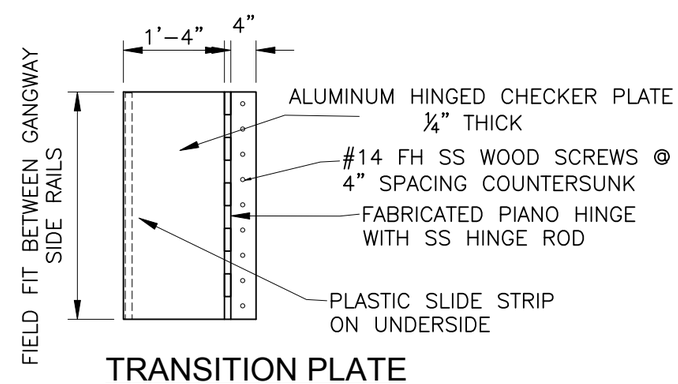

TRANSITION PLATE

STATE OF MAINE
STEPHEN T. RUELL
No. 4396
LICENSED PROFESSIONAL ENGINEER

NO.	REVISION	DATE

DESIGNED BY -
DRAWN BY STR
-
DATE REVISED 4-4-2025

Town of Southest Harbor, Maine
MANSET TOWN DOCK

DECK REPLACEMENT GANGWAY DE
OPTION B - PRECAST CONCRET

PINNACLE HILL ENGINEERING
33 Pinnacle Road
Canaan, ME 04924
PinnacleHillEngineering@gmail.com

B-7
REV.

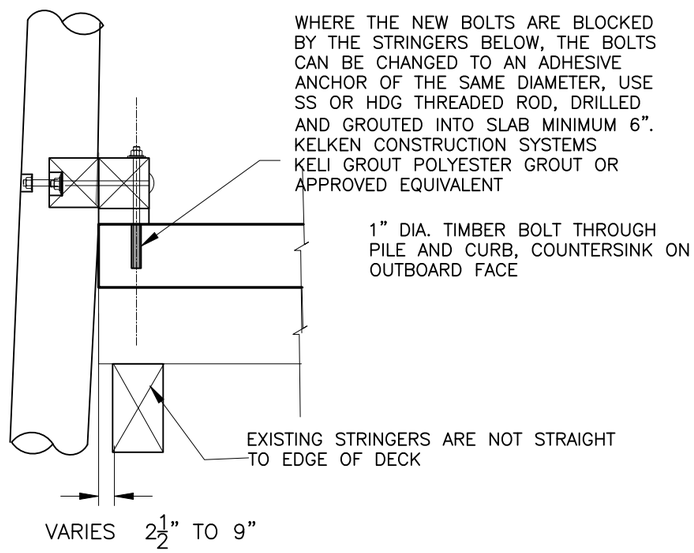

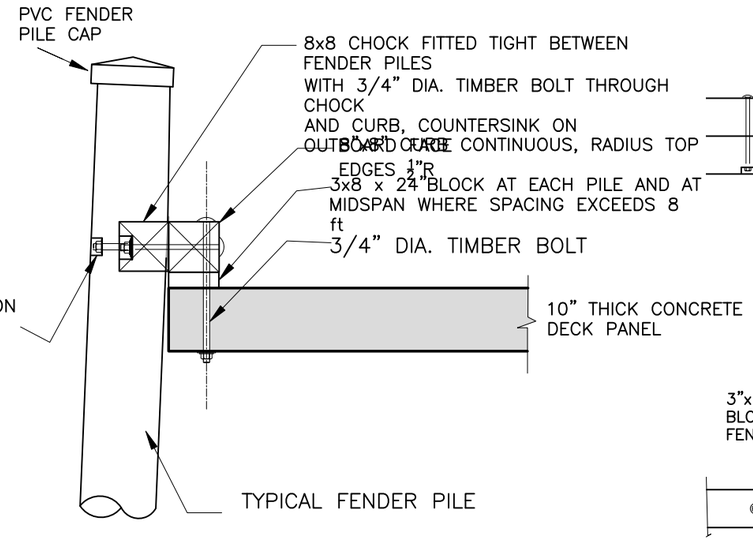

WEST SIDE FENDER PILE AND CURB DETAIL

(East side curb mounting as shown but without fenders and chocks)

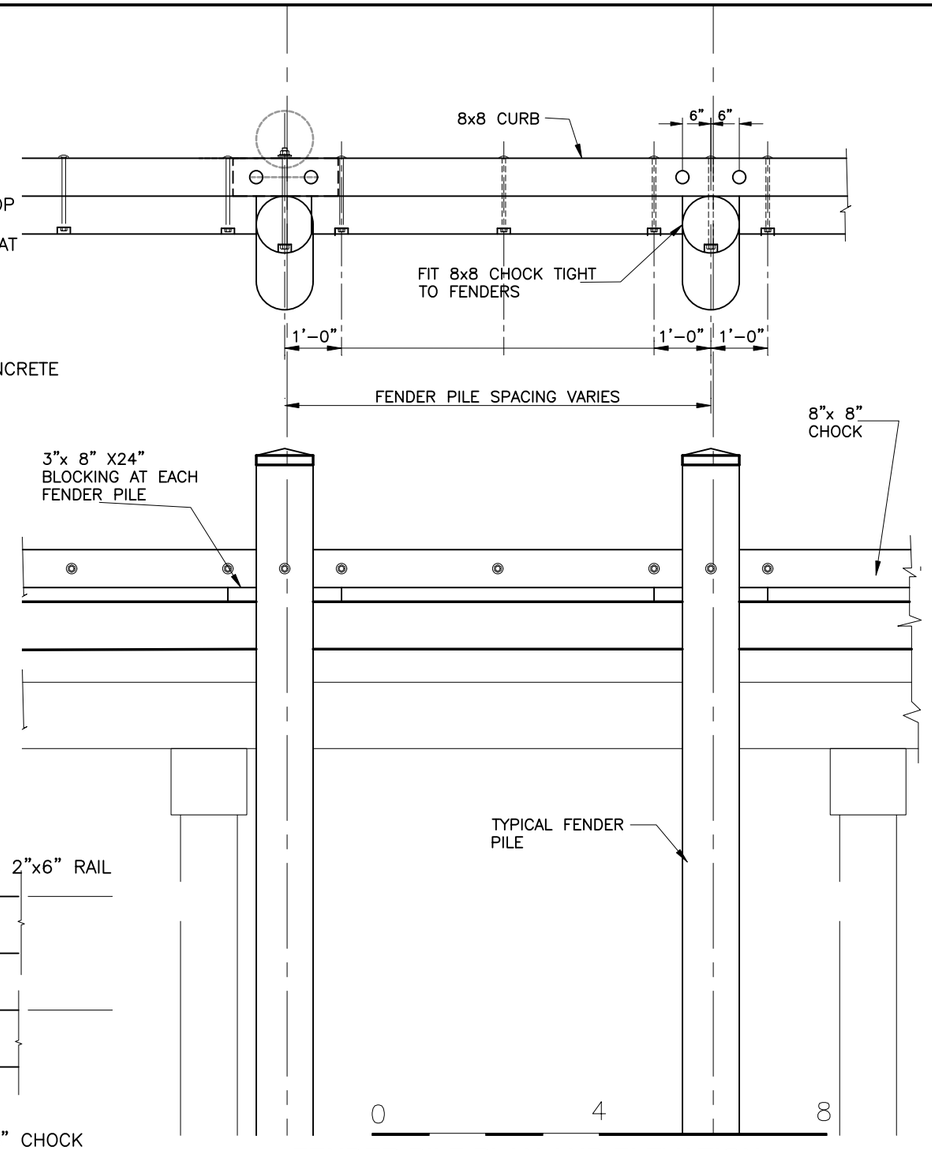

FENDER PILE PLAN AND ELEVATION

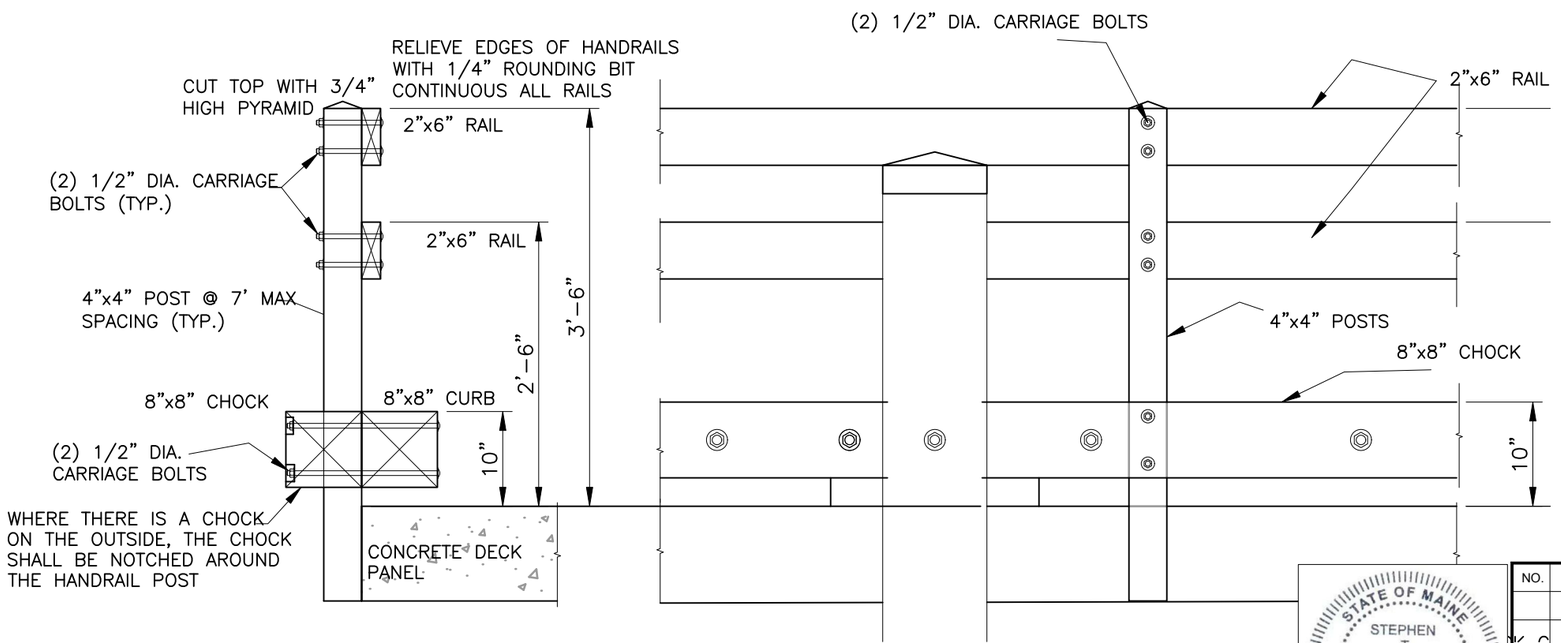

TYPICAL HANDRAIL DETAILS

STATE OF MAINE
STEPHEN T. RUELL
No. 4396
LICENSED PROFESSIONAL ENGINEER

NO.	REVISION	DATE

DESIGNED BY -
DRAWN BY STR
-
DATE REVISED 4-4-2025

Town of Southest Harbor, Maine
MANSET TOWN DOCK

DECK REPLACEMENT FENDER DETAILS
OPTION B - PRECAST CONCRETE

PINNACLE HILL ENGINEERING
33 Pinnacle Road
Canaan, ME 04924
PinnacleHillEngineering@gmail.com

B-8
REV. O

OUTLINE SPECIFICATIONS

1. THESE ARE GENERAL NOTES APPLYING TO ALL WORK. WHERE SPECIFIC NOTES ARE SHOWN ON OTHER DRAWINGS, THOSE NOTES SHALL TAKE PRECEDENCE.

2. ELEVATION REFERENCE: ELEVATIONS SHOWN ON THE DRAWINGS ARE APPROXIMATELY ON MEAN LOWER LOW WATER DATUM.

3. STRUCTURAL DESIGN RATING – AASHTO H20–44 LOADING.

SITE PREPARATION

A. SEE PLANS FOR TEMPORARY CLOSURES OF WHARF, SUBJECT TO OWNER APPROVAL. MAINTAIN USE OF PUBLIC RAMP FOR THE PUBLIC DURING THE PROJECT TO THE EXTENT PRACTICAL. CLEARLY POST NOTICES OF PLANNED CLOSURES AND ALTERNATIVE ACCESS. LIMIT TIME BOAT LAUNCH RAMP IS OUT OF OPERATION.

B. PROVIDE BARRICADES AND SAFETY PROVISIONS DURING CONSTRUCTION WHERE REQUIRED.

CONCRETE

A. ALL WORK SHALL CONFORM TO ACI 318, ACI 301 AND ACI 347, LATEST EDITIONS.

B. SPECIFICATIONS

a. MINIMUM 28 DAY STRENGTH = 5000 PSI FOR PRECAST CONCRETE DECK PANELS. 4000 PSI FOR CAST–IN PLACE CONCRETE. SEE SPECIFICATIONS FOR OTHER RESTRICTIONS ON CEMENT.

b. MAXIMUM WATER/CEMENT RATIO = 0.40,

c. SLUMP 3"± 1"

d. AIR CONTENT PROVIDED BY AIR ENTRAINMENT ADMIXTURE 5% TO 7%, AS MEASURED BY ASTM C231

e. WATER REDUCING ADMIXTURE SHALL BE USED AT THE OPTION OF THE CONTRACTOR

f. ADMIXTURES CONTAINING CALCIUM CHLORIDE SHALL NOT BE USED.

g. DCI ADMIXTURE FROM WR GRACE SHALL BE USED IN DECK PANELS, AT RATE 4 GALS/CY

C. CURE CONCRETE ABOVE 50 DEGREES F AND IN MOIST CONDITIONS FOR 7 DAYS MINIMUM. DO NOT APPLY LOADS TO NEW CONCRETE FOR AT LEAST 7 DAYS UNLESS APPROVED BY THE ENGINEER.

D. CONFORM TO ACI REQUIREMENTS FOR COLD WEATHER CONCRETING. PROTECT FRESH CONCRETE FROM FREEZING. HEAT FORMS AND REINFORCEMENT TO ABOVE FREEZING PRIOR TO PLACEMENT.

E. PROVIDE WOOD FLOAT FINISH ON TOP SURFACE OF DECK PANELS. CAREFULLY SCREED ALL SURFACES FOR DRAINAGE AND TO PREVENT PUDDLES.

F. COMPLY WITH MAINE DOT STANDARD SPECIFICATIONS.

G. CONCRETE REINFORCEMENT SPECIFICATION ASTM A615 GRADE 60, EPOXY COATED

B. SPLICES SHALL NOT BE USED EXCEPT AS SHOWN

C. HOOKS IN BARS DIMENSIONED AND BENT PER ACI STANDARD HOOKS.

D. REINFORCEMENT COVER, 3" CLEAR FOR BOTTOM OF DECK PANELS AND 2" CLEAR FOR TOP OF DECK PANELS.

GROUTED DOWELS

CLEAN DRILL HOLES WITH AIR PRESSURE TO REMOVE DUST, CHIPS, AND STANDING WATER. HOLES MAY BE DAMP. GROUT SHALL BE NON–SHRINK PROPRIETARY CEMENT GROUT (4,000 PSI MINIMUM), SUCH AS FIVE–STAR GROUT, OR APPROVED POLYESTER GROUT (SUCH AS KELI GROUT), AT CONTRACTOR'S OPTION. SELECTED GROUT MUST BE SUITABLE FOR USE IN WET HOLES.AND TEMPERATURES DURING INSTALLATION. FOLLOW. MANUFACTURER'S INSTRUCTIONS

STEEL

A. MATERIALS

STEEL ASTM A36 OR A992 U.N.O.

.STEEL FINISH

. WHERE INDICATED AS GALVANIZED, STEEL ITEMS SHALL BE HOT DIPPED GALVANIZED PER ASTM A123, AFTER FABRICATION. NO WELDING OR CUTTING OF GALVANIZED FABRICATIONS IN THE FIELD. REPAIR DAMAGED GALVANIZING WITH TWO COATS OF ZINC–OXIDE DUST PAINT CONFORMING TO MIL–P–21035.

. EXPOSED STEEL NOT GALVANIZED SHALL BE EPOXY COATED. PROVIDE APPROVED COAL TAR EPOXY POLYAMIDE MEETING FS QPL–2441 AND SSPC PAINT 16. APPLY TWO COATS OF 8 MILS MINIMUM, FOR A TOTAL OF 16 MILS MINIMUM..

C. BOLTS FOR STEEL CONNECTIONS –ASTM A325 GALVANIZED, UNLESS NOTED OTHERWISE.
BOLTS FOR IMBER CONNECTIONS – ASTM A307 GALVANIZED UNLESS NOTED OTHERWISE.

D. ALL EXPOSED BOLTS, FASTENERS, WASHERS AND HARDWARE SHALL BE HOT DIPPED GALVANIZED OR STAINLESS STEEL. ALL BOLTS SHALL HAVE WASHERS UNDER HEAD AND NUT ENDS. ALL WASHERS BELOW MHW SHALL BE GALVANIZED PLATE WASHERS OR DOCK WASHERS, MINIMUM 1/4" THICKNESS.

E. WELDING IN ACCORDANCE WITH ASTM D1.1. WELD ROD E70XX.

TIMBER

A. TIMBER PRESERVATIVE TREATMENT

a. PILES AND BRACING MEMBERS INDICATED TO BE TREATED FOR SALTWATER IMMERSION OR SPLASH SHALL BE PRESSURE TREATED WITH CCA (CHROMATED COPPER ARSENATE) TO AWPA USE CATEGORY 5A EXCEPT ANY TIMBER USED WITH ANY PORTION BELOW EXTREME HIGH WATER SHALL HAVE A MINIMUM RETENTION OF 2.5 PCF.

b. MEMBERS LOCATED ABOVE THE WATER LINE AND WHERE CONTACT WITH USERS MAY GENERALLY OCCUR SHALL BE A WATERBORNE COPPER–BASED PRESERVATIVE SUITABLE FOR AWPA USE CATEGORY 4B.
ACCEPTABLE CHEMICALS INCLUDE:

COPPER AZOLE (CA–B OR CA–C) –0.31 PCF

MICRONIZED COPPER AZOLE (uCA) –0.23 PCF

AMMONIACAL COPPER QUAT (ACQ–B) –0.60 PCF

MICRONIZED COPPER QUAT (MCQ) –0.60 PCF

c. SEE TIMBER SCHEDULE FOR USAGE CLASSIFICATION SPECIFIED. THE TIMBER SCHEDULE SHALL TAKE PRECEDENCE OVER THE ABOVE SPECIFICATIONS.

B. ALL CUTS, BOLT HOLES, COUNTERSINKING, AND ABRASIONS IN TREATED WOOD MATERIALS SHALL BE FIELD TREATED PER AWPA M4. USE FULL LENGTH MEMBERS TREATED AFTER CUTTING TO AVOID UNTREATED CUTS AND SPLICES. PURCHASE MEMBERS CUT TO LENGTH PRIOR TO TREATMENT TO THE EXTENT POSSIBLE.

STATE OF MAINE
STEPHEN T. RUELL
No. 4396
LICENSED PROFESSIONAL ENGINEER

NO.	REVISION	DATE

DESIGNED BY -
DRAWN BY STR
-
DATE REVISED 4-4-2025

Town of Southest Harbor, Maine
MANSET TOWN DOCK

GENERAL NOTES
OPTION B - PRECAST CONCRETE

PINNACLE HILL ENGINEERING
33 Pinnacle Road
Canaan, ME 04924
PinnacleHillEngineering@gmail.com

B-9
REV. O